제2021 - 2148924 호

안 전 인 증 서

(사업장명) 극동호이스트(주)

(소 재 지) (15423)경기도 안산시 단원구 해봉로 119, 607B, 4L(성곡동630-2)

위 사업장에서 제조하는 아래의 품목이 산업안전보건법 제84조 및 시행규칙 제110조제1항에 따른 안전인증 심사 결과 안전·보건기준에 적합하므로 안전인증표시의 사용을 인증합니다.

품 목

호이스트 (국내품)

형식,모델(용량,등급)/인증번호

KD7.5-L (7.5Ton) / 21-AE2AC-00001

인 증 기 준

고용노동부 고시 제2020 - 41호 (위험기계·기구 안전인증 고시)

인 증 조 건

(15423)경기도 안산시 단원구 해봉로 119, 607B, 4L(성곡동630-2)에서 생산된 동일 형식 제품에 한함

2021년 01월 11일

한국산업안전보건공단 이사장

심사결과 통지서

신청인	사업장명	극동호이스트(주)	사업장관리번호	134-81-013350
	사업자등록번호	134-81-01335	대표자 성명	최성찬
	소재지	(154 - 23) 경기도 안산시 단원구 해봉로 119(성곡동)		

안전인증대상 기계·기구명	호이스트[동일형식인정 - "별첨"]		
형 식 (규 격)	KD7.5-L	용 량 (등 급)	7.5 Ton

산업안전보건법 제 84조 및 같은 법 시행규칙 제110조에 따라 실시한

[ ] 예비심사
[V] 서면심사
[ ] 기술능력 및 생산체계 심사
[ ] 개별 제품심사
[ ] 개별 제품심사(제작중)
[ ] 형식별 제품심사

결과가 [V] 적 합 / [ ] 부적합 함을 통지합니다.

2021년 01월 04일

인증심사원 공준성 (서명 또는 인) 공준성

한국산업안전보건공단 이사장

불법복제 및 배포금지

서 면 심 사 서 류

형식 번호 : KD7.5-L

심 사 필
한국산업안전보건공단

극 동 호 이 스 트 ㈜

주소 : 경기도 안산시 단원구 해봉로 119 (성곡동)

TEL : 031) 491 - 5311

FAX : 031) 363 - 3952

192.168.11.51 / 2021-01-06 08:38:38

동 일 형 식 일 람 표

사업장명	극동호이스트㈜	개정일자 및 번호		인증번호	
형식 및 모델		동일 형식 인정범위 및 내역			비 고
형식	모델	권상속도(m/min)	횡행속도(m/min)	양정(m)	횡행방식
KD7.5-L	KD7.5-L6-L	고 속 : 3.8 m/min 저 속 : 2.8 m/min	고 속 : 15 m/min (INVERTER : 2~15 m/min) 저 속 : 10 m/min (INVERTER : 2~10 m/min)	6	모터 구동식	횡행 인버터 포함
	KD7.5-L9-L			9		
	KD7.5-L12-L			12		

불법복제 및 배포금지

192.168.11.51 / 2021-01-06 08:38:38

불법복제 및 배포금지

제 2012-BJ-0009 호

안 전 인 증 서

정호엔지니어링

경기도 광명시 노동사동 440-5

위 사업장에서 제조하는 아래의 품목이 산업안전보건법 제34조 및 같은 법 시행규칙 제58조의4제4항에 따른 안전인증 심사 결과 안전 · 보건기준에 적합하므로 안전인증표시의 사용을 인증합니다.

품 목

양중기용 과부하방지장치

형식 · 모델/용량 · 등급/인증번호

형식·모델	용량·등급	인증번호
JDL-100	J-2	12-AV2BJ-0009

인 증 기 준

방호장치 의무안전인증 고시(고용노동부고시 제2010-36호)

인 증 조 건

아래 주소에서 생산되는 제품에 한함.

정호엔지니어링, 경기도 광명시 노동사동 440-5

2012년 06월 11일

한국산업안전보건공단 이사장

192.168.11.51 / 2021-01-06 08:38:38

형식번호	KD7.5-L
모 델 명	KD7.5-L6-L

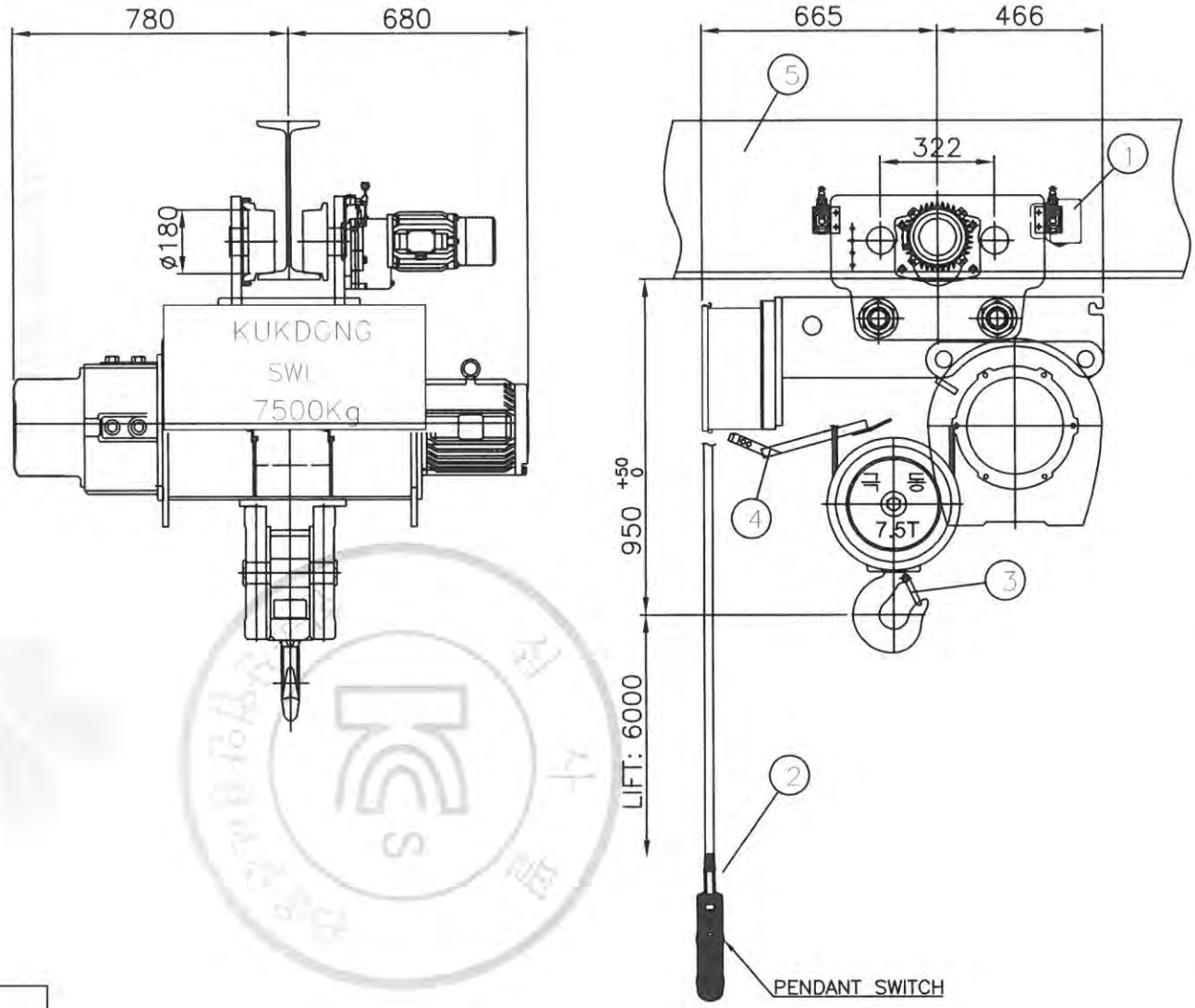

NO	DESCRIPTION	MATERIAL	Q'TY (UNIT)	REMARK
1	LOAD LIMITER	–	1	
2	PENDANT SWITCH	–	1	
3	SAFETY LATCH	SS275	1	
4	UPPER LIMIT	SS275	1	
5	MONORAIL	SS275	–	

MODEL			KD7.5-L6-L
RATED LOAD			7500 KG
TESTING LOAD			9375 KG
LIFT			6 M
RATING			30 MIN
HOISTING	HIGH	SPEED	3.8 m/min
		MOTOR	5.5 KW x 6P
	LOW	SPEED	2.8 m/min
		MOTOR	4.2 KW x 8P
TRAVERSING	HIGH	SPEED	15 m/min (inverter : 2~15m/min)
		MOTOR	1.5 KW x 4P
	LOW	SPEED	10 m/min (inverter : 2~10m/min)
		MOTOR	1.0 KW x 6P
WIRE ROPE			(6x36) ø14 x 4falls
POWER SOURCES			AC3ø 220,380,440,460,480V 60Hz
CONTROL VOLTAGE			AC1ø 110,120V 60Hz
CONTROL METHOD			PENDANT SWITCH
BEAM WIDTH			150,175,190mm
COLOR			10 B 3/5
WEIGHT			1000 KG

REV	DATE	DESCRIPTION	DRAWN	CHECK	APPRVD
A	07.DEC.2020	FOR CONSTRUCTION	M.H.KIM		

PROJECT

CLIENT

MANUFACTURER: KUKDONG HOIST CO., LTD.

TITLE: GENERAL ARRANGEMENT DRAWING MONORAIL HOIST KD7.5-L6-L

SCALE	DWG. NO.	SHT. NO.	REV.
-	KD7.5L6000	-	A

A3 (420x297mm)

불법복제 및 배포금지

192.168.11.51 / 2021-01-06 08:38:38

형 식 번 호	KD7.5-L
모 델 명	KD7.5-L9-L

NO	DESCRIPTION	MATERIAL	Q'TY (UNIT)	REMARK
1	LOAD LIMITER	–	1	
2	PENDANT SWITCH	–	1	
3	SAFETY LATCH	SS275	1	
4	UPPER LIMIT	SS275	1	
5	MONORAIL	SS275	–	

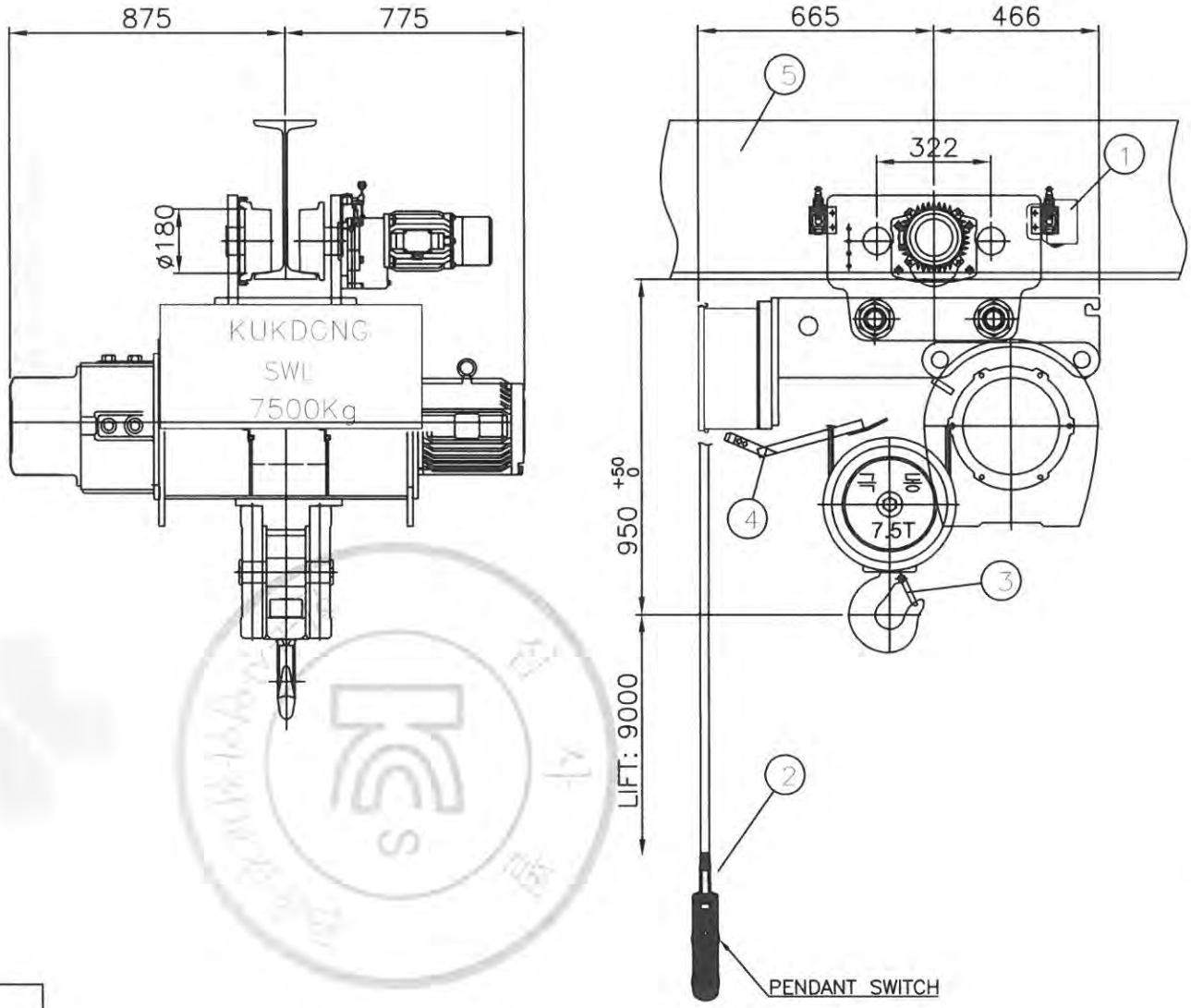

MODEL			KD7.5-L9-L
RATED LOAD			7500 KG
TESTING LOAD			9375 KG
LIFT			9 M
RATING			30 MIN
HOISTING	HIGH	SPEED	3.8 m/min
		MOTOR	5.5 KW x 6P
	LOW	SPEED	2.8 m/min
		MOTOR	4.2 KW x 8P
TRAVERSING	HIGH	SPEED	15 m/min (inverter : 2~15m/min)
		MOTOR	1.5 KW x 4P
	LOW	SPEED	10 m/min (inverter : 2~10m/min)
		MOTOR	1.0 KW x 6P
WIRE ROPE			(6x36) ø14 x 4falls
POWER SOURCES			AC3ø 220,380,440,460,480V 60Hz
CONTROL VOLTAGE			AC1ø 110,120V 60Hz
CONTROL METHOD			PENDANT SWITCH
BEAM WIDTH			150,175,190mm
COLOR			10 B 3/5
WEIGHT			1090 KG

REV	DATE	DESCRIPTION	DRAWN	CHECK	APPRVD
A	07.DEC.2020	FOR CONSTRUCTION	M.H.KIM		

PROJECT

CLIENT

MANUFACTURER: KUKDONG HOIST CO., LTD.

TITLE: GENERAL ARRANGEMENT DRAWING
MONORAIL HOIST KD7.5-L9-L

SCALE	DWG. NO.	SHT. NO.	REV.
-	KD7.5L9000	-	A

A3 (420x297mm)

불법복제 및 배포금지

192.168.11.51 / 2021-01-06 08:38:38

형식번호	KD7.5-L
모델명	KD7.5-L12-L

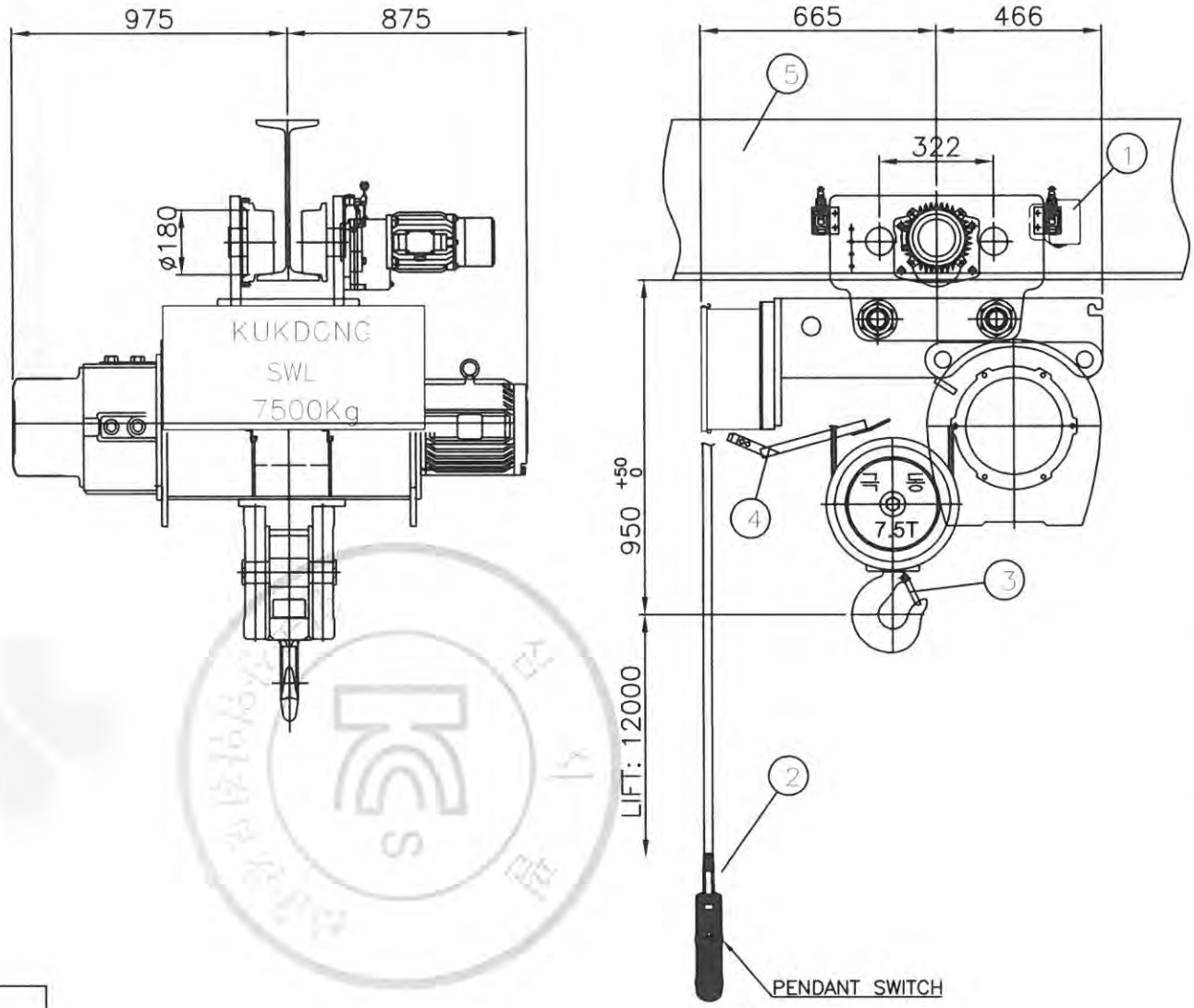

NO	DESCRIPTION	MATERIAL	Q'TY (UNIT)	REMARK
1	LOAD LIMITER	–	1	
2	PENDANT SWITCH	–	1	
3	SAFETY LATCH	SS275	1	
4	UPPER LIMIT	SS275	1	
5	MONORAIL	SS275	–	

MODEL			KD7.5-L12-L
RATED LOAD			7500 KG
TESTING LOAD			9375 KG
LIFT			12 M
RATING			30 MIN
HOISTING	HIGH	SPEED	3.8 m/min
		MOTOR	5.5 KW x 6P
	LOW	SPEED	2.8 m/min
		MOTOR	4.2 KW x 8P
TRAVERSING	HIGH	SPEED	15 m/min (inverter : 2~15m/min)
		MOTOR	1.5 KW x 4P
	LOW	SPEED	10 m/min (inverter : 2~10m/min)
		MOTOR	1.0 KW x 6P
WIRE ROPE			(6x36) ø14 x 4falls
POWER SOURCES			AC3ø 220,380,440,460,480V 60Hz
CONTROL VOLTAGE			AC1ø 110,120V 60Hz
CONTROL METHOD			PENDANT SWITCH
BEAM WIDTH			150,175,190mm
COLOR			10 B 3/5
WEIGHT			1190 KG

REV	DATE	DESCRIPTION	DRAWN	CHECK	APPRVD
A	07.DEC.2020	FOR CONSTRUCTION	M.H.KIM		

PROJECT

CLIENT

MANUFACTURER KUKDONG HOIST CO., LTD.

TITLE GENERAL ARRANGEMENT DRAWING
MONORAIL HOIST KD7.5-L12-L

SCALE	DWG. NO.	SHT. NO.	REV.
-	KD7.5L12000	-	A

A3 (420x297mm)

192.168.11.51 / 2021-01-06 08:38:38

불법복제 및 배포금지

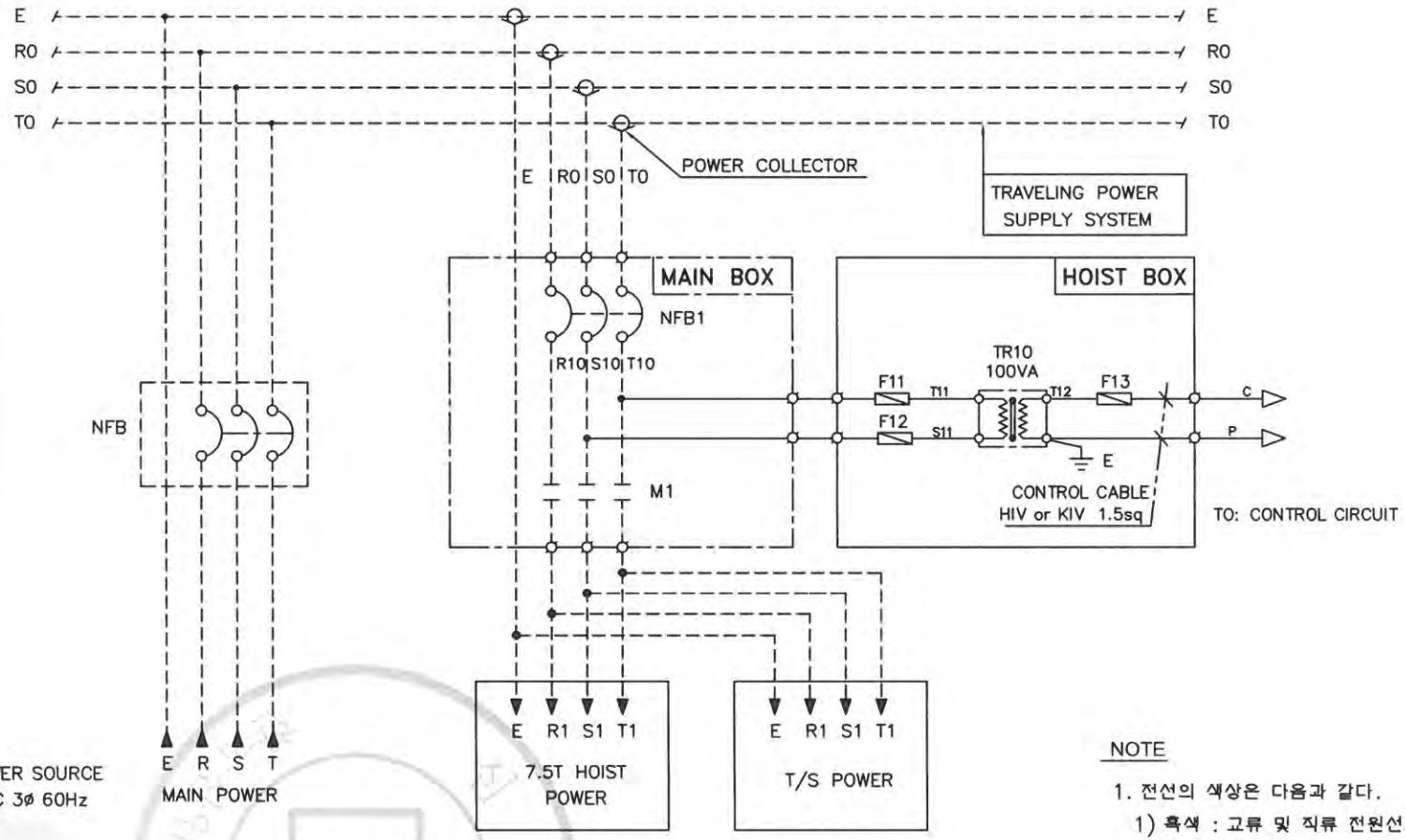

VOLTAGE	F11 F12	F13	MCCB100	TR10
220V	2A	3A	60AF/60AT	220/110,120V 100VA
380V	1A	3A	50AF/40AT	380/110,120V 100VA
440V	1A	3A	30AF/30AT	440/110,120V 100VA
460V	1A	3A	30AF/30AT	460/110,120V 100VA
480V	1A	3A	30AF/30AT	480/110,120V 100VA

NOTE

1. 전선의 색상은 다음과 같다.
   1) 흑색 : 교류 및 직류 전원선로
   2) 적색 : 교류제어회로
   3) 주황색 : 외부 전원에서 공급되는 연동장치 제어회로
   4) 녹색 또는 녹색과 황색 혼용 : 접지선
   5) 청색 : 직류 제어선로
2. 제어용 전선 : 1.5mm KIV,HIV
3. 제작시 다소 변경 될수있음.
4. 외함 개방구조는 다음과 같을것.
   외함 개방후 충전되어있는 부분은 IP2X 이상의 직접 접촉 방호가 되어있을것.

REV	DATE	DESCRIPTION	DRAWN	CHECK	APPRVD
A	05.AUG.2016	REDRAWING	K.H.Han	-	-

TITLE: MAIN POWER CIRCUIT DIAGRAM
KD7.5-L

CUSTOMER

극동호이스트 주식회사
KUKDONG HOIST CO., LTD.

DESIGN	SCALE	SHT. NO.	ORDER NO.

DWG. NO. KD75-E000

ADR'S NO.

192.168.11.51 / 2021-01-06 08:38:38

불법복제 및 배포금지

ADR'S NO.

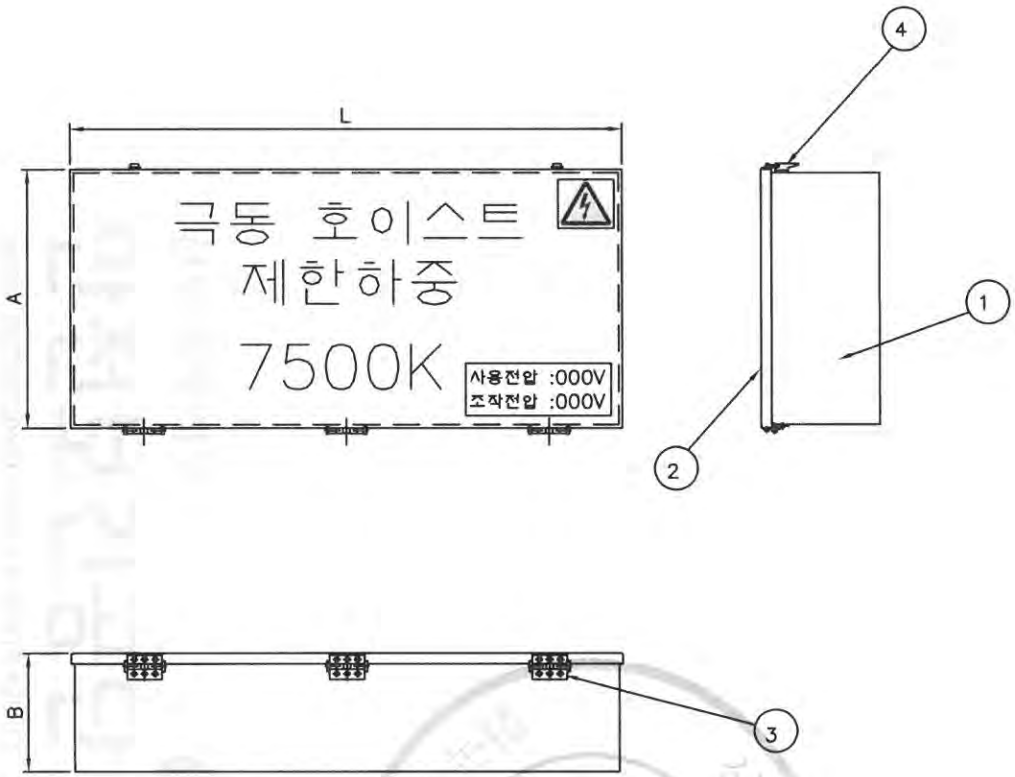

NO	DESCRIPTION	MT'L	REMARKS
1	PANEL CASE	SPC	1.6t
2	PANEL COVER	SPC	1.6t
3	HINGE	PUR'	
4	CLAMP	PUR'	
5	SPONGE	PUR'	

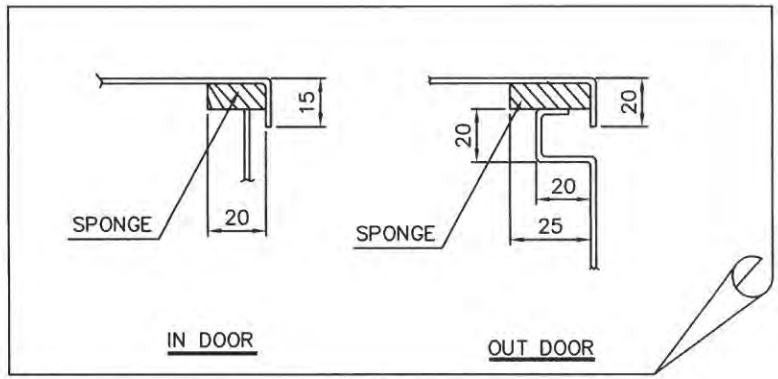

N O T E

1.PROTECTION DEGREE ;

A, INDOOR TYPE : DUST PROOF

B, OUT DOOR TYPE : SPLASH PROOF

2.FINAL PAINTING COLOR (MUNSELL NO.)

A. IN SIDE : 10B 3/5

B. OUT SIDE : 10B 3/5

3.PAINTING THICKNESS : ABOVE 40 um

4.APPLICATION VOLTAGE : 220V,380V,440V,460V,480V

5.제어용 전선 : 1.5sq KIV,HIV

6.외함 개방 구조는 다음과 같다.

1) 외함 개방시 충전 부분이 차단되도록 한다.

2) 외함 개방 후 충전되어있는 부분은 IP2X 이상의 직접 접촉 방호가 되어있을것.

SELECTION	HOIST CAPACITY	DESCRIPTION	IN DOOR			OUT DOOR			REMARK
			A	B	L	A	B	L	
☞	7.5 TON	NORMAL	360	170	790	360	170	810	
		CREEP	360	170	790	360	170	810	

REV	DATE	DESCRIPTION	DRAWN	CHECK	APPRVD
△1	23.DEC.2016	REDRAWING	K.H.Han	-	-

TITLE

HOISTING CONTROL BOX LAY-OUT

KD75-L

CUSTOMER

극동호이스트 주식회사
KUKDONG HOIST CO., LTD.

DESIGN	SCALE	SHT. NO.	ORDER NO.

DWG. NO.

KD75EB00

192.168.11.51 / 2021-01-06 08:38:38

불법복제 및 배포금지

ADR'S NO.

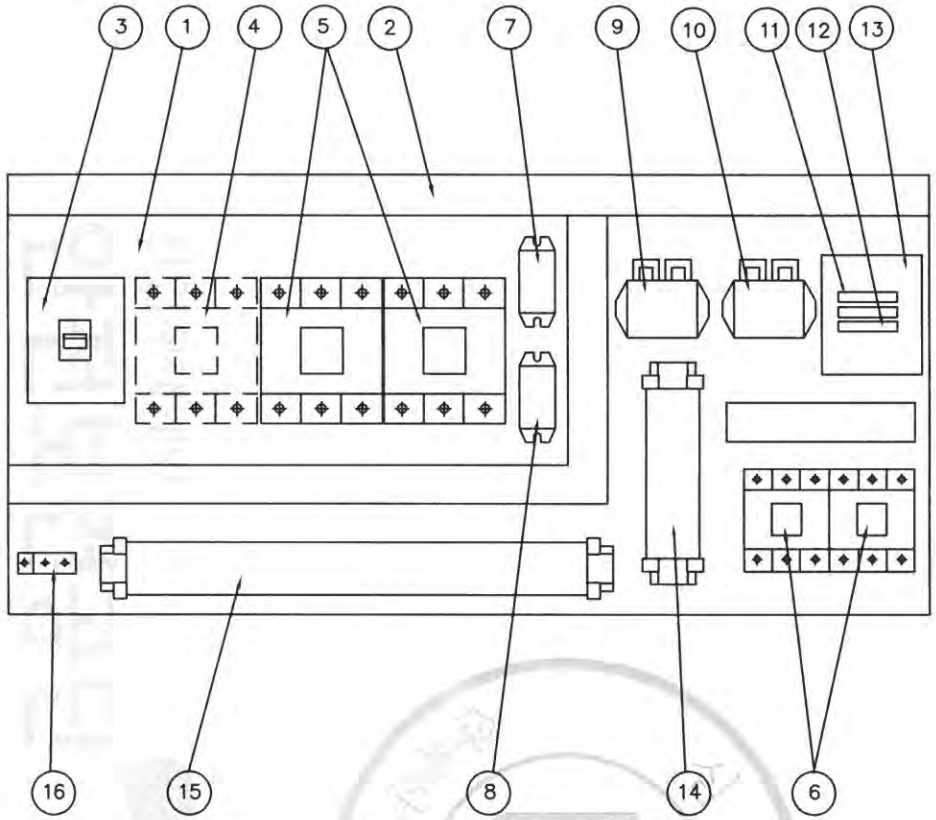

NO	DESCRIPTION	SPECIFICATION	Q'TY	REMARK
1	CHASSIS PLATE		1	아 연 도 금
2	CABLE DUCT	–	1	
3	N.F.B	60AF/60AT	1	HOISTING
4	MAGNET CONTACTOR	DMC48b(DMC40b)	1	MAIN MAG.
5	MAGNET CONTACTOR	DMC65b	2	HOISTING
6	MAGNET CONTACTOR	DMC22b	2	TRAVERSING
7	SILICON RECTIFIER	SR–60	1	HOISTING
8	SILICON RECTIFIER	SR–30	1	TRAVERSING
9	E.O.C.R	SS–60	1	HOISTING
10	E.O.C.R	SS–05	1	TRAVERSING
11	FUSE	2 A	2	
12	FUSE	3 A	1	
13	TRANSFORMER	220V/110,120V, 100VA	1	
14	UPPER LIMIT	AC 600V/75A	1	
15	TERMINAL BLOCK	60A,15A		
16	EARTH TERMINAL	3tx20x50	1	

NOTE

1. UPPER LIMIT LS–1,LS–2의 접점 허용 전류 용량. : AC 600V, 75A
2. POWER SOURCE : AC. 3ø 220V 60HZ
3. EARTH TERMINAL RESISTANCE : 0.018 Ω

NOTE

1. 전선의 색상은 다음과 같다.
   1) 흑색 : 교류 및 직류 전원선로
   2) 적색 : 교류제어회로
   3) 주황색 : 외부 전원에서 공급되는 연동장치 제어회로
   4) 녹색 또는 녹색과 황색 혼용 : 접지선
   5) 청색 : 직류 제어선로
2. CABLE MATERIAL : KIV OR EQUIVALENT / MIN SIZE : 1.5sq
3. 제어용 전선 : 1.5mm KIV,HIV
4. 제작시 다소 변경 될수있음.
5. 외함 개방구조는 다음과 같을것.
   1) 외함 개방시 충전부분이 차단되도록 할것.
   2) 외함 개방후 충전되어있는 부분은 IP2X 이상의 직접 접촉 방호가 되어있을것.

192.168.11.51 / 2021-01-06 08:38:38

불법복제 및 배포금지

REV	DATE	DESCRIPTION	DRAWN	CHECK	APPRVD
A	23.DEC.2016	REDRAWING	K.H.Han	-	-

TITLE: HOISTING CONTROL BOX
KD75-L

CUSTOMER

극동호이스트 주식회사
KUKDONG HOIST CO., LTD.

DESIGN	SCALE	SHT. NO.	ORDER NO.

DWG. NO. KD75BA21

1	2	3	4	5	6	7	8	9	10	11	12	13	14	15	16	17	18	19	20

ADR'S NO.

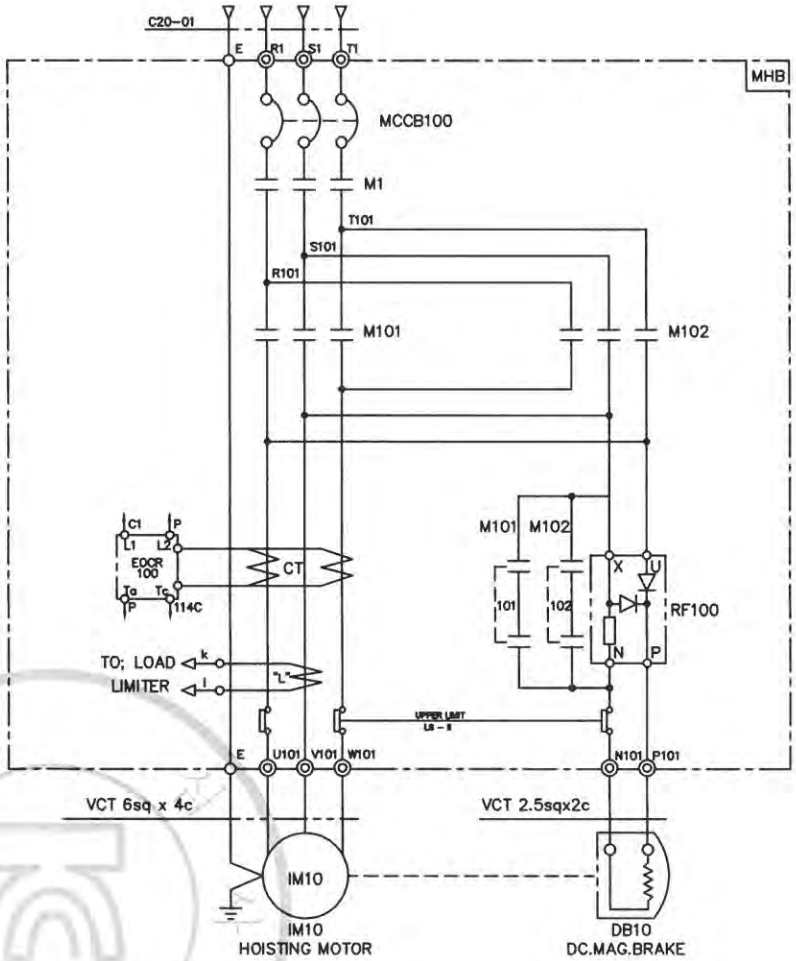

SPECIFICATION / SYMBOLS / DESCRIPTION	HOISTING POWER	HOISTING MOTOR	DC.MAG' BRAKE	NO FUSE BREAKER	TRANSFORMER	UPPER LIMIT	FUSE		MAIN MAGNET	MAGNET CONTACTOR	ELECTRIC OVER CURRENT RELAY	SILICON RECTIFIER	LOAD LIMITER	CABLE
	HOIST	IM 10	DB10	MCCB100	TR 10	LS-I, LS-II	F11,F12	F13	M1	M101,M102	EOCR100	RF100	LOAD LIMITER	C20-01
	7.5TON AC3PH 220V 60Hz	5.5KW x 6P	DC 100V	60AF/60AT	220/110,120V,100VA	AC 600V 75A	2A	3A	DMC48b	DMC65b	SS-60	SR-60	JDL-100	VCT 10sqx4c
	7.5TON AC3PH 220V 60Hz	4.2KW x 8P	DC 100V	60AF/60AT	220/110,120V,100VA	AC 600V 75A	2A	3A	DMC40b	DMC65b	SS-30	SR-60	JDL-100	VCT 10sqx4c
SELECTION / MAKER	KUKDONG			LS	SHINHAN	KUKDONG	–		DONG-A		ASECO		JUNGHO	DONGIL

REV	DATE	DESCRIPTION	DRAWN	CHECK	APPRVD
A	05.AUG.2016	REDRAWING	K.H.Han	-	-

TITLE
HOISTING POWER CIRCUIT
KD7.5-L

CUSTOMER

극동호이스트 주식회사
KUKDONG HOIST CO., LTD.

DESIGN	SCALE	SHT. NO.	ORDER NO.

DWG. NO.
KD75-E21

192.168.11.51 / 2021-01-06 08:38:38

불법복제 및 배포금지

ADR'S NO.

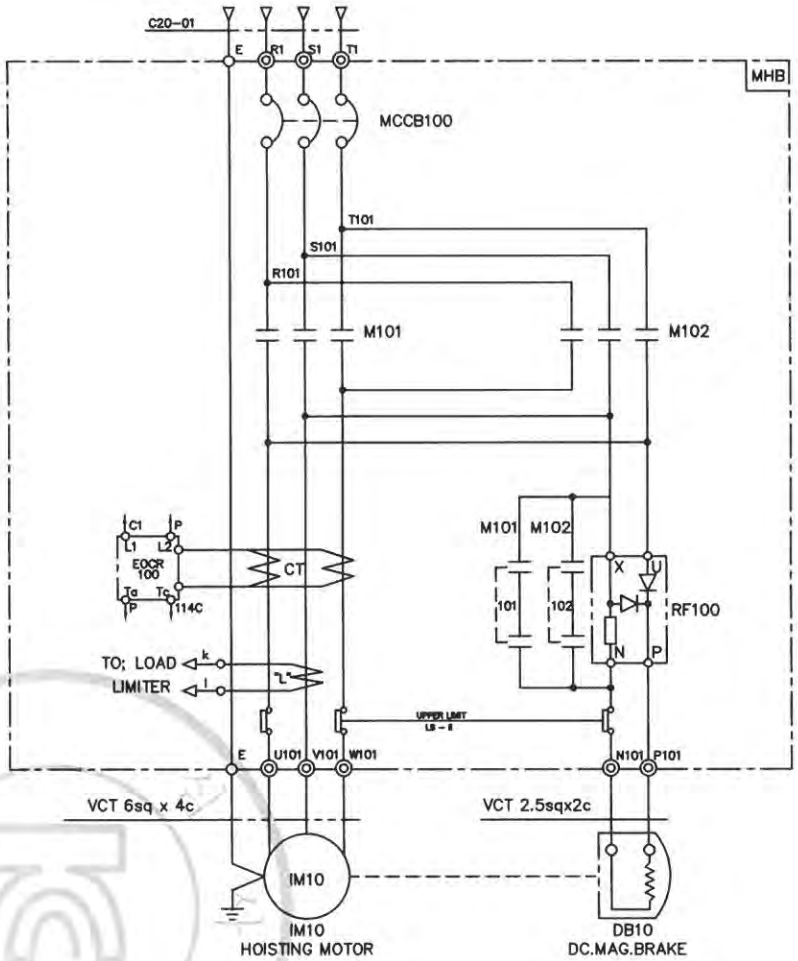

SPECIFICATION / SYMBOLS / DESCRIPTION	HOISTING POWER	HOISTING MOTOR	DC.MAG' BRAKE	NO FUSE BREAKER	TRANSFORMER	UPPER LIMIT	FUSE		MAGNET CONTACTOR	ELECTRIC OVER CURRENT RELAY	SILICON RECTIFIER	LOAD LIMITER	CABLE
	HOIST	IM 10	DB10	MCCB100	TR 10	LS-I, LS-II	F11,F12	F13	M101,M102	EOCR100	RF100	LOAD LIMITER	C20-01
	7.5TON AC3PH 220V 60Hz	5.5KW x 6P	DC 100V	60AF/60AT	220/110,120V,100VA	AC 600V 75A	2A	3A	DMC65b	SS-60	SR-60	JDL-100	VCT 10sqx4c
	7.5TON AC3PH 220V 60Hz	4.2KW x 8P	DC 100V	60AF/60AT	220/110,120V,100VA	AC 600V 75A	2A	3A	DMC65b	SS-30	SR-60	JDL-100	VCT 10sqx4c
SELECTION / MAKER	KUKDONG			LS	SHINHAN	KUKDONG	-		DONG-A	ASECO		JUNGHO	DONGIL

REV	DATE	DESCRIPTION	DRAWN	CHECK	APPRVD
5	05.AUG.2016	REDRAWING	K.H.Han	-	-

TITLE
HOISTING POWER CIRCUIT
KD7.5-L

CUSTOMER

극동호이스트 주식회사
KUKDONG HOIST CO., LTD.

DESIGN	SCALE	SHT. NO.	ORDER NO.

DWG. NO.
KD75-E22

192.168.11.51 / 2021-01-06 08:38:38

불법복제 및 배포금지

1	2	3	4	5	6	7	8	9	10	11	12	13	14	15	16	17	18	19	20

ADR'S NO.

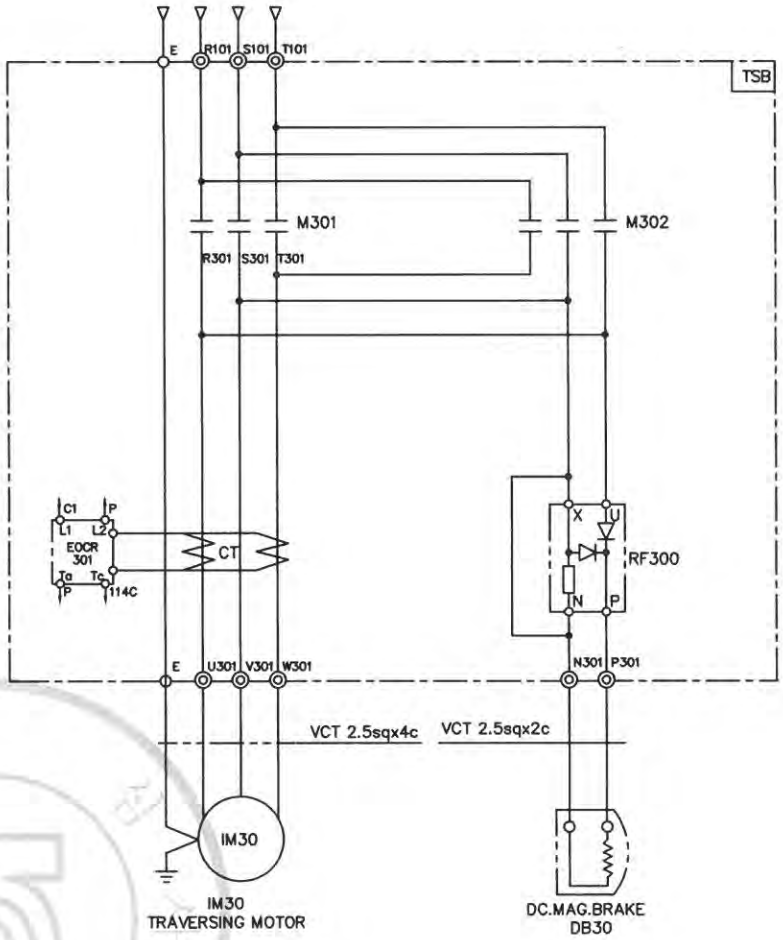

SPECIFICATION / SYMBOLS / DESCRIPTION	HOISTING POWER	TRAVERSING MOTOR	DC.MAG BRAKE	MAGNET CONTACTOR	UPPER LIMIT	ELECTRIC OVER CURRENT RELAY	SILICON RECTIFIER
	HOIST	IM 30	30	M301,M302	LS-I	EOCR300	RF300
	7.5TON AC3PH 220V 60Hz	1.5KW x 4P	DC 100V	DMC22b	AC 600V 75A	SS-30	SR-30
	7.5TON AC3PH 220V 60Hz	1.0KW x 6P	DC 100V	DMC22b	AC 600V 75A	SS-30	SR-30
SELECTION / MAKER	KUKDONG			DONG-A	KUKDONG	ASECO	

REV	DATE	DESCRIPTION	DRAWN	CHECK	APPRVD
A	05.AUG.2016	REDRAWING	K.H.Han	-	-

TITLE
TRAVERSING CIRCUIT DIAGRAM
KD7.5-L

CUSTOMER

극동호이스트 주식회사
KUKDONG HOIST CO., LTD.

DESIGN	SCALE	SHT. NO.	ORDER NO.

DWG. NO.
KD75-TE21

192.168.11.51 / 2021-01-06 08:38:38

불법복제 및 배포금지

ADR'S NO.

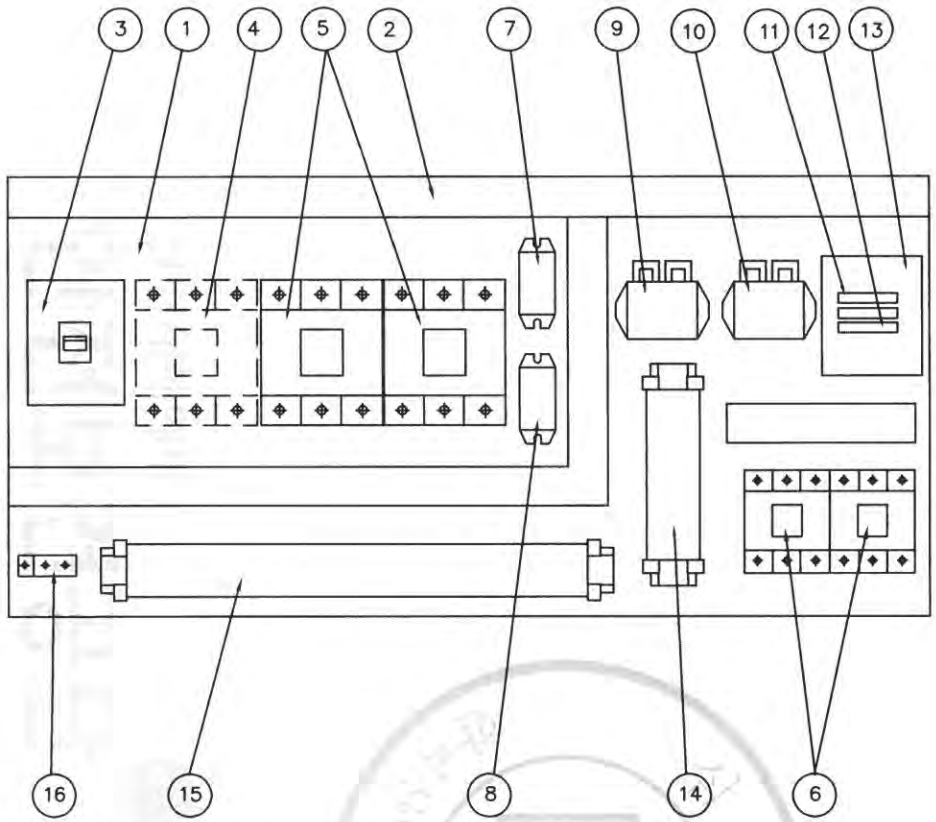

NO	DESCRIPTION	SPECIFICATION	Q'TY	REMARK
1	CHASSIS PLATE		1	아 연 도 금
2	CABLE DUCT	–	1	
3	N.F.B	50AF/40AT	1	HOISTING
4	MAGNET CONTACTOR	DMC40b	1	MAIN MAG.
5	MAGNET CONTACTOR	DMC48b	2	HOISTING
6	MAGNET CONTACTOR	DMC22b	2	TRAVERSING
7	SILICON RECTIFIER	SR-60	1	HOISTING
8	SILICON RECTIFIER	SR-30	1	TRAVERSING
9	E.O.C.R	SS-30	1	HOISTING
10	E.O.C.R	SS-05	1	TRAVERSING
11	FUSE	1 A	2	
12	FUSE	3 A	1	
13	TRANSFORMER	380V/110,120V, 100VA	1	
14	UPPER LIMIT	AC 600V/75A	1	
15	TERMINAL BLOCK	60A,15A		
16	EARTH TERMINAL	3tx20x50	1	

N O T E

1. UPPER LIMIT LS-1,LS-2의 접점 허용 전류 용량. : AC 600V, 75A
2. POWER SOURCE : AC. 3ø 380V 60HZ
3. EARTH TERMINAL RESISTANCE : 0.018 Ω

NOTE

1. 전선의 색상은 다음과 같다.
   1) 흑색 : 교류 및 직류 전원선로
   2) 적색 : 교류제어회로
   3) 주황색 : 외부 전원에서 공급되는 연동장치 제어회로
   4) 녹색 또는 녹색과 황색 혼용 : 접지선
   5) 청색 : 직류 제어선로
2. CABLE MATERIAL : KIV OR EQUIVALENT / MIN SIZE : 1.5sq
3. 제어용 전선 : 1.5mm KIV,HIV
4. 제작시 다소 변경 될수있음.
5. 외함 개방구조는 다음과 같을것.
   1) 외함 개방시 충전부분이 차단되도록 할것.
   2) 외함 개방후 충전되어있는 부분은 IP2X 이상의 직접 접촉 방호가 되어있을것.

REV	DATE	DESCRIPTION	DRAWN	CHECK	APPRVD
A	23.DEC.2016	REDRAWING	K.H.Han	-	-

TITLE: HOISTING CONTROL BOX

KD75-L

CUSTOMER

극동호이스트 주식회사
KUKDONG HOIST CO., LTD.

DESIGN	SCALE	SHT. NO.	ORDER NO.

DWG. NO. KD75BA31

192.168.11.51 / 2021-01-06 08:38:38

불법복제 및 배포금지

1	2	3	4	5	6	7	8	9	10	11	12	13	14	15	16	17	18	19	20

ADR'S NO.

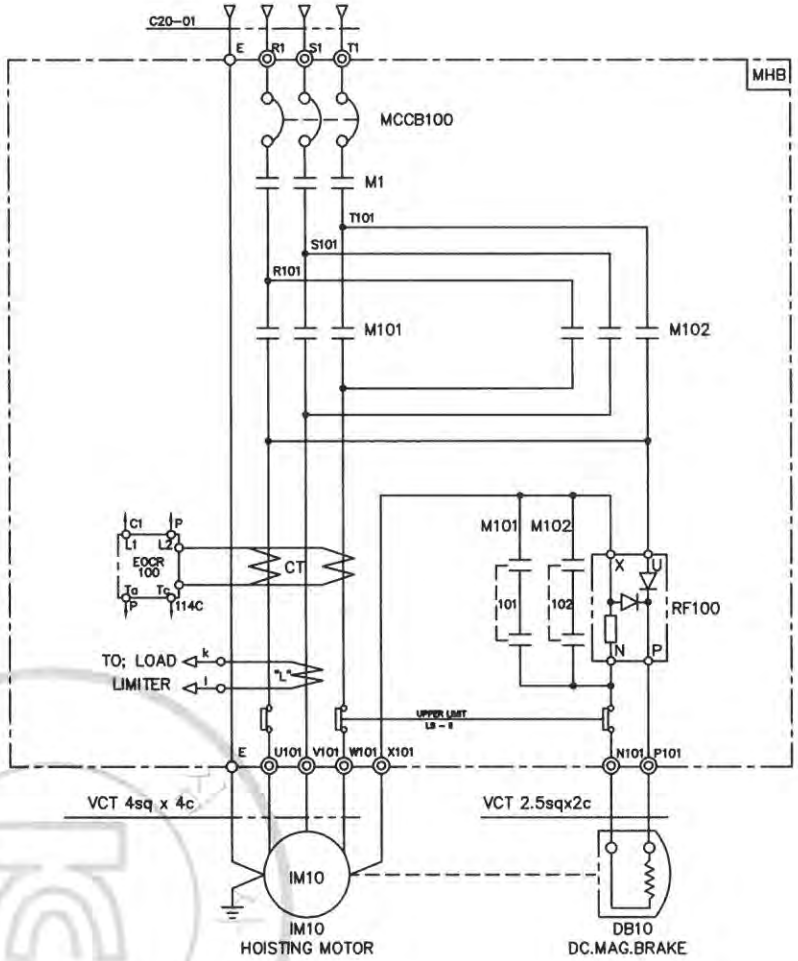

SPECIFICATION / SYMBOLS / DESCRIPTION	HOISTING POWER	HOISTING MOTOR	DC.MAG' BRAKE	NO FUSE BREAKER	TRANSFORMER	UPPER LIMIT	FUSE		MAIN MAGNET	MAGNET CONTACTOR	ELECTRIC OVER CURRENT RELAY	SILICON RECTIFIER	LOAD LIMITER	CABLE
	HOIST	IM 10	DB10	MCCB100	TR 10	LS-I, LS-II	F11,F12	F13	M1	M101,M102	EOCR100	RF100	LOAD LIMITER	C20-01
	7.5TON AC3PH 380V 60Hz	5.5KW x 6P	DC 100V	50AF/40AT	380/110,120V,100VA	AC 600V 75A	1A	3A	DMC40b	DMC48b	SS-30	SR-60	JDL-100	VCT 6sqx4c
	7.5TON AC3PH 380V 60Hz	4.2KW x 8P	DC 100V	50AF/40AT	380/110,120V,100VA	AC 600V 75A	1A	3A	DMC40b	DMC48b	SS-30	SR-60	JDL-100	VCT 6sqx4c
SELECTION MAKER	KUKDONG			LS	SHINHAN	KUKDONG	–		DONG-A		ASECO		JUNGHO	DONGIL

REV	DATE	DESCRIPTION	DRAWN	CHECK	APPRVD
A	05.AUG.2016	REDRAWING	K.H.Han	-	-

TITLE
HOISTING POWER CIRCUIT
KD7.5-L

CUSTOMER

극동호이스트 주식회사
KUKDONG HOIST CO., LTD.

DESIGN	SCALE	SHT. NO.	ORDER NO.

DWG. NO.
KD75-E31

192.168.11.51 / 2021-01-06 08:38:38

불법복제 및 배포금지

1	2	3	4	5	6	7	8	9	10	11	12	13	14	15	16	17	18	19	20

ADR'S NO.

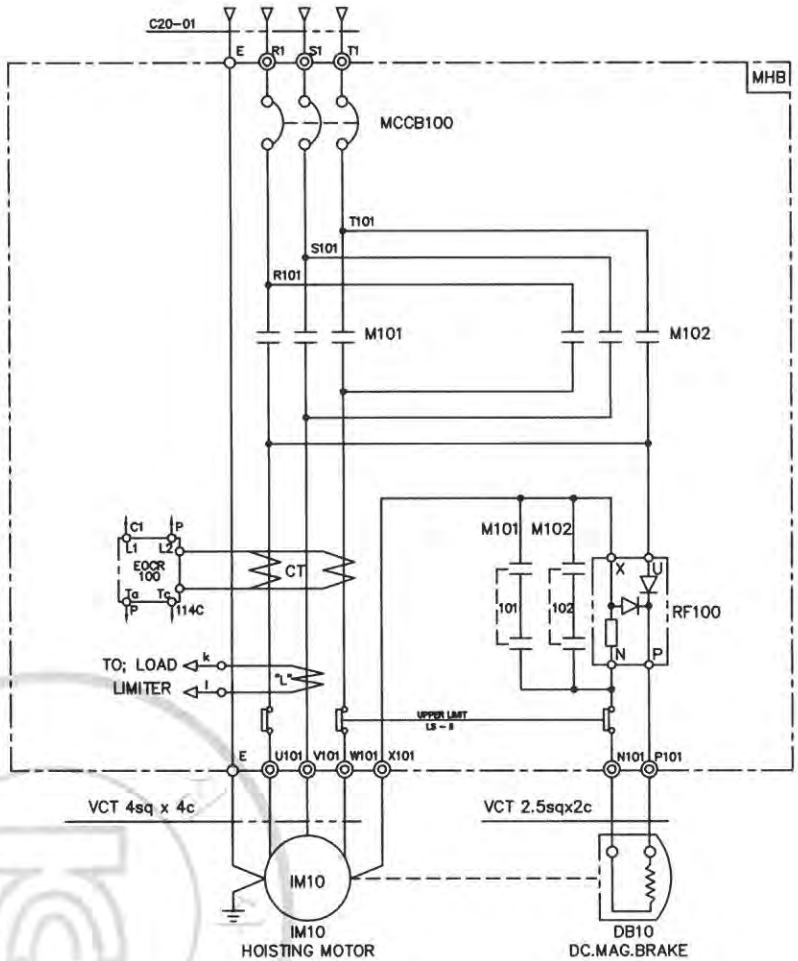

SPECIFICATION / SYMBOLS / DESCRIPTION	HOISTING POWER	HOISTING MOTOR	DC.MAG BRAKE	NO FUSE BREAKER	TRANSFORMER	UPPER LIMIT	FUSE		MAGNET CONTACTOR	ELECTRIC OVER CURRENT RELAY	SILICON RECTIFIER	LOAD LIMITER	CABLE
	HOIST	IM 10	DB10	MCCB100	TR 10	LS-I, LS-II	F11,F12	F13	M101,M102	EOCR100	RF100	LOAD LIMITER	C20-01
	7.5TON AC3PH 380V 60Hz	5.5KW x 6P	DC 100V	50AF/40AT	380/110,120V,100VA	AC 600V 75A	1A	3A	DMC48b	SS-30	SR-60	JDL-100	VCT 6sqx4c
	7.5TON AC3PH 380V 60Hz	4.2KW x 8P	DC 100V	50AF/40AT	380/110,120V,100VA	AC 600V 75A	1A	3A	DMC48b	SS-30	SR-60	JDL-100	VCT 6sqx4c
SELECTION / MAKER	KUKDONG			LS	SHINHAN	KUKDONG	–		DONG-A	ASECO		JUNGHO	DONGIL

REV	DATE	DESCRIPTION	DRAWN	CHECK	APPRVD
A	05.AUG.2016	REDRAWING	K.H.Han	-	-

TITLE
HOISTING POWER CIRCUIT
KD7.5-L

CUSTOMER

극동호이스트 주식회사
KUKDONG HOIST CO., LTD.

DESIGN	SCALE	SHT. NO.	ORDER NO.

DWG. NO.
KD75-E32

192.168.11.51 / 2021-01-06 08:38:38

불법복제 및 배포금지

1	2	3	4	5	6	7	8	9	10	11	12	13	14	15	16	17	18	19	20

ADR'S NO.

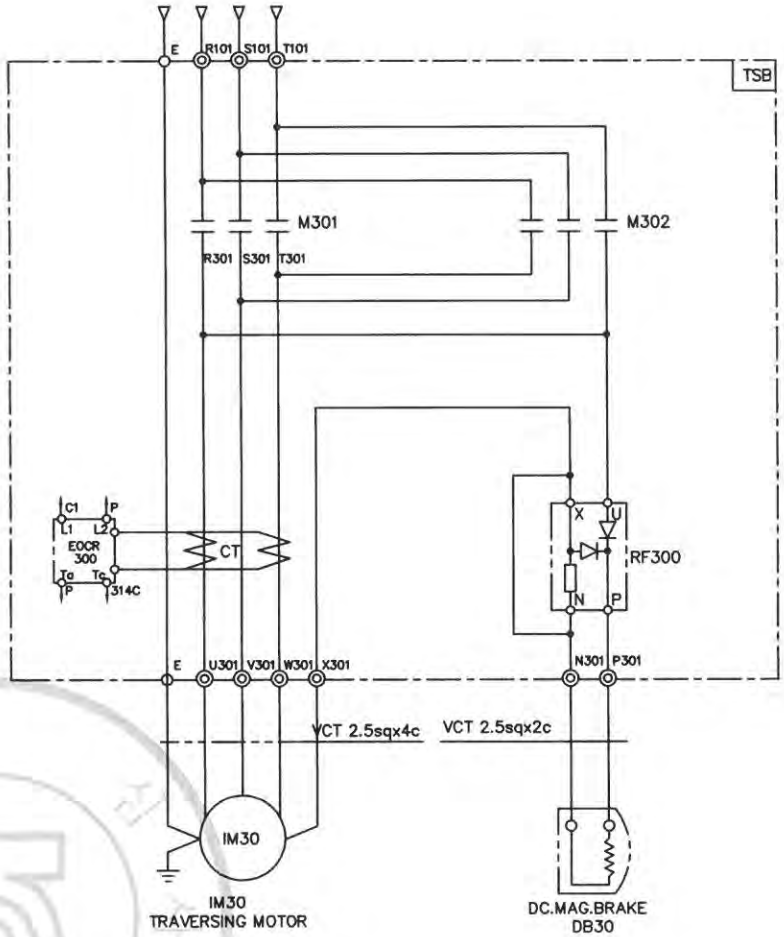

SPECIFICATION / SYMBOLS / DESCRIPTION	HOISTING POWER	TRAVERSING MOTOR	DC.MAG' BRAKE	TRANSFORMER	MAGNET CONTACTOR	UPPER LIMIT	ELECTRIC OVER CURRENT RELAY	SILICON RECTIFIER
	HOIST	IM 30	30	TR 300	M301,M302	LS-I	EOCR300	RF300
	7.5TON AC3PH 380V 60Hz	1.5KW x 4P	DC 100V	380/220V,100VA	DMC22b	AC 600V 75A	SS-05	SR-30
	7.5TON AC3PH 380V 60Hz	1.0KW x 6P	DC 100V	380/220V,100VA	DMC22b	AC 600V 75A	SS-05	SR-30
SELECTION MAKER	KUKDONG			SHINHAN	DONG-A	KUKDONG	ASECO	

REV	DATE	DESCRIPTION	DRAWN	CHECK	APPRVD
A	05.AUG.2016	REDRAWING	K.H.Han	-	-

TITLE
TRAVERSING CIRCUIT DIAGRAM
KD7.5-L

CUSTOMER

극동호이스트 주식회사
KUKDONG HOIST CO., LTD.

DESIGN	SCALE	SHT. NO.	ORDER NO.

DWG. NO.
KD75-TE31

192.168.11.51 / 2021-01-06 08:38:38

불법복제 및 배포금지

ADR'S NO.

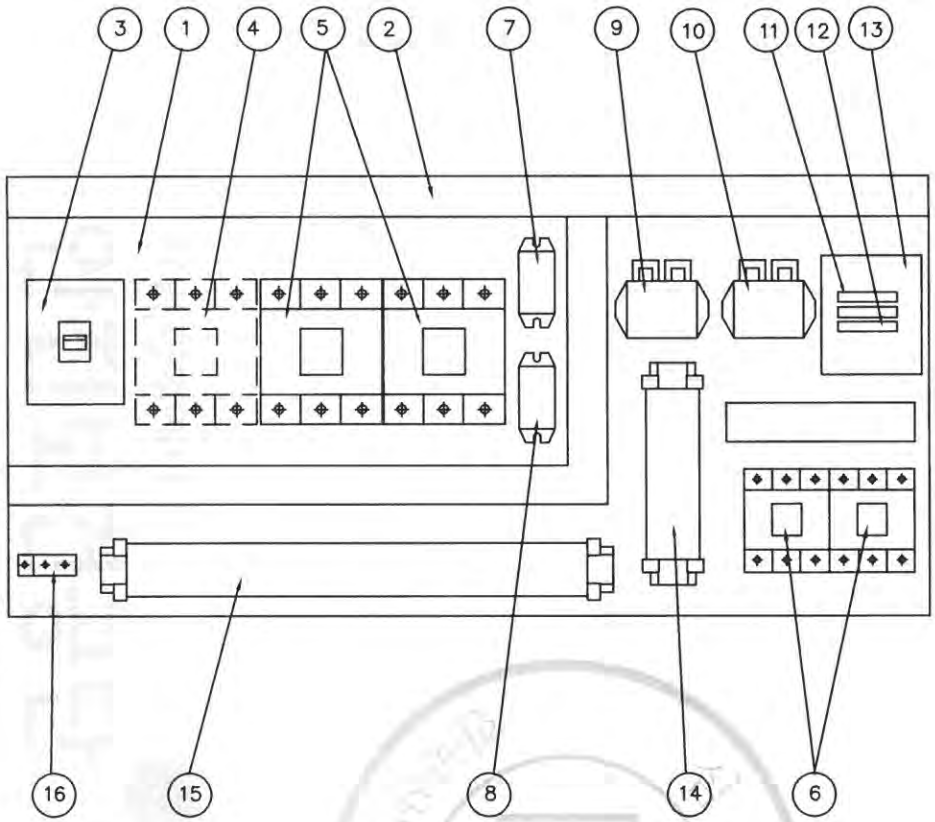

NO	DESCRIPTION	SPECIFICATION	Q'TY	REMARK
1	CHASSIS PLATE		1	아 연 도 금
2	CABLE DUCT	–	1	
3	N.F.B	30AF/30AT	1	HOISTING
4	MAGNET CONTACTOR	DMC32b(DMC22b)	1	MAIN MAG.
5	MAGNET CONTACTOR	DMC48b	2	HOISTING
6	MAGNET CONTACTOR	DMC22b	2	TRAVERSING
7	SILICON RECTIFIER	SR–60	1	HOISTING
8	SILICON RECTIFIER	SR–30	1	TRAVERSING
9	E.O.C.R	SS–30	1	HOISTING
10	E.O.C.R	SS–05	1	TRAVERSING
11	FUSE	1 A	2	
12	FUSE	3 A	1	
13	TRANSFORMER	440,460,480V/110,120V, 100VA	1	
14	UPPER LIMIT	AC 600V/75A	1	
15	TERMINAL BLOCK	60A,15A		
16	EARTH TERMINAL	3tx20x50	1	

NOTE

1. UPPER LIMIT LS–1,LS–2의 접점 허용 전류 용량. : AC 600V, 75A
2. POWER SOURCE : AC. 3ø 440, 460, 480V 60HZ
3. EARTH TERMINAL RESISTANCE : 0.018 Ω

NOTE

1. 전선의 색상은 다음과 같다.
   1) 흑색 : 교류 및 직류 전원선로
   2) 적색 : 교류제어회로
   3) 주황색 : 외부 전원에서 공급되는 연동장치 제어회로
   4) 녹색 또는 녹색과 황색 혼용 : 접지선
   5) 청색 : 직류 제어선로
2. CABLE MATERIAL : KIV OR EQUIVALENT / MIN SIZE : 1.5sq
3. 제어용 전선 : 1.5mm KIV,HIV
4. 제작시 다소 변경 될수있음.
5. 외함 개방구조는 다음과 같을것.
   1) 외함 개방시 충전부분이 차단되도록 할것.
   2) 외함 개방후 충전되어있는 부분은 IP2X 이상의 직접 접촉 방호가 되어있을것.

192.168.11.51 / 2021-01-06 08:38:38

불법복제 및 배포금지

REV	DATE	DESCRIPTION	DRAWN	CHECK	APPRVD
1	23.DEC.2016	REDRAWING	K.H.Han	-	-

TITLE: HOISTING CONTROL BOX

KD75-L

CUSTOMER

극동호이스트 주식회사
KUKDONG HOIST CO., LTD.

DESIGN	SCALE	SHT. NO.	ORDER NO.

DWG. NO. KD75BA41

ADR'S NO.

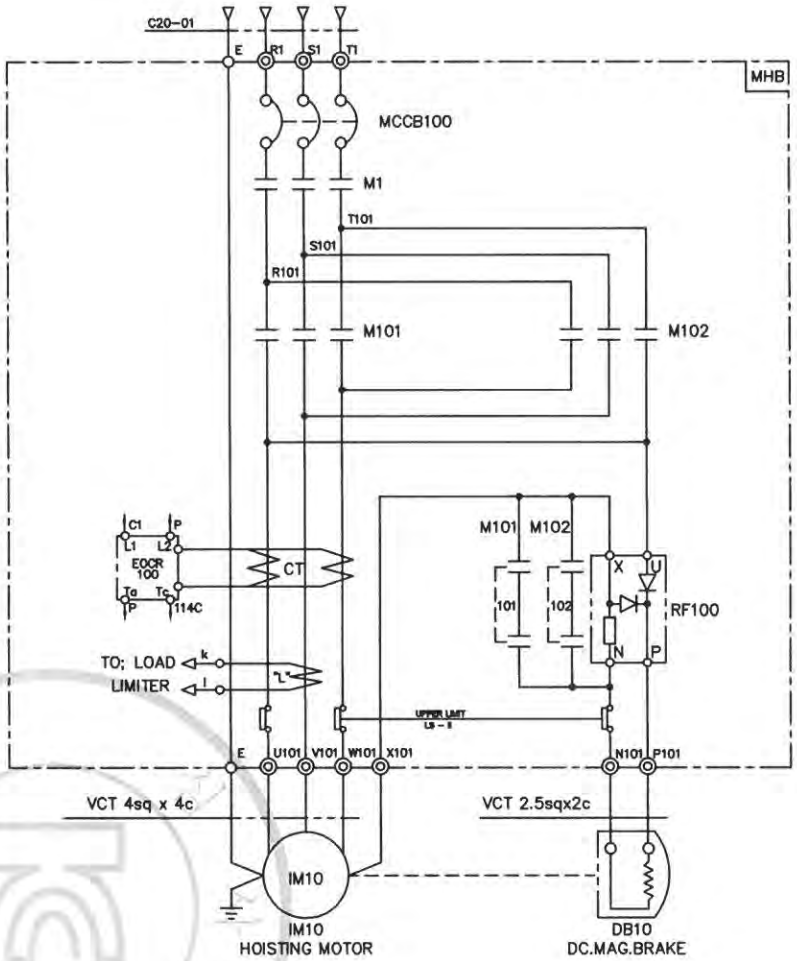

SPECIFICATION / SYMBOLS / DESCRIPTION	HOISTING POWER	HOISTING MOTOR	DC.MAG BRAKE	NO FUSE BREAKER	TRANSFORMER	UPPER LIMIT	FUSE		MAIN MAGNET	MAGNET CONTACTOR	ELECTRIC OVER CURRENT RELAY	SILICON RECTIFIER	LOAD LIMITER	CABLE
	HOIST	IM 10	DB10	MCCB100	TR 10	LS-I, LS-II	F11,F12	F13	M1	M101,M102	EOCR100	RF100	LOAD LIMITER	C20-01
	7.5TON AC3PH 440,460,480V 60Hz	5.5KW x 6P	DC 100V	30AF/30AT	440,460,480V/110,120, 100VA	AC 600V 75A	1A	3A	DMC32b	DMC32b	SS-30	SR-60	JDL-100	VCT 4sq x 4c
	7.5TON AC3PH 440,460,480V 60Hz	4.2KW x 8P	DC 100V	30AF/30AT	440,460,480V/110,120, 100VA	AC 600V 75A	1A	3A	DMC22b	DMC22b	SS-30	SR-60	JDL-100	VCT 4sq x 4c
SELECTION / MAKER	KUKDONG			LS	SHINHAN	KUKDONG	–		DONG-A		ASECO		JUNGHO	DONGIL

REV	DATE	DESCRIPTION	DRAWN	CHECK	APPRVD
A	05.AUG.2016	REDRAWING	K.H.Han	-	-

TITLE: HOISTING POWER CIRCUIT

KD7.5-L

CUSTOMER

극동호이스트 주식회사
KUKDONG HOIST CO., LTD.

DESIGN	SCALE	SHT. NO.	ORDER NO.

DWG. NO. KD75-E41

192.168.11.51 / 2021-01-06 08:38:38

불법복제 및 배포금지

ADR'S NO.

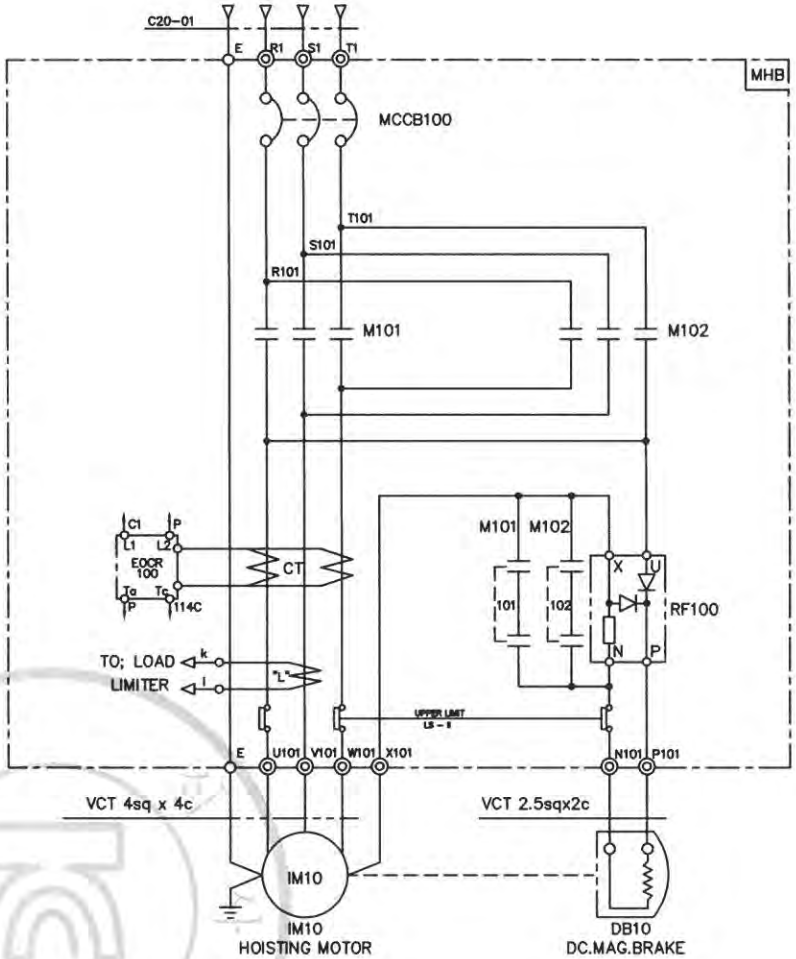

SPECIFICATION / SYMBOLS / DESCRIPTION	HOISTING POWER	HOISTING MOTOR	DC.MAG' BRAKE	NO FUSE BREAKER	TRANSFORMER	UPPER LIMIT	FUSE		MAGNET CONTACTOR	ELECTRIC OVER CURRENT RELAY	SILICON RECTIFIER	LOAD LIMITER	CABLE
	HOIST	IM 10	DB10	MCCB100	TR 10	LS-I, LS-II	F11,F12	F13	M101,M102	EOCR100	RF100	LOAD LIMITER	C20-01
	7.5TON AC3PH 440,460,480V 60Hz	5.5KW x 6P	DC 100V	30AF/30AT	440,460,480V/110,120, 100VA	AC 600V 75A	1A	3A	DMC32b	SS-30	SR-60	JDL-100	VCT 4sq x 4c
	7.5TON AC3PH 440,460,480V 60Hz	4.2KW x 8P	DC 100V	30AF/30AT	440,460,480V/110,120, 100VA	AC 600V 75A	1A	3A	DMC22b	SS-30	SR-60	JDL-100	VCT 4sq x 4c
SELECTION / MAKER	KUKDONG			LS	SHINHAN	KUKDONG	–		DONG-A	ASECO		JUNGHO	DONGIL

REV	DATE	DESCRIPTION	DRAWN	CHECK	APPRVD
A	05.AUG.2016	REDRAWING	K.H.Han	-	-

TITLE: HOISTING POWER CIRCUIT

KD7.5-L

CUSTOMER

극동호이스트 주식회사
KUKDONG HOIST CO., LTD.

DESIGN	SCALE	SHT. NO.	ORDER NO.

DWG. NO. KD75-E42

192.168.11.51 / 2021-01-06 08:38:38

불법복제 및 배포금지

ADR'S NO.

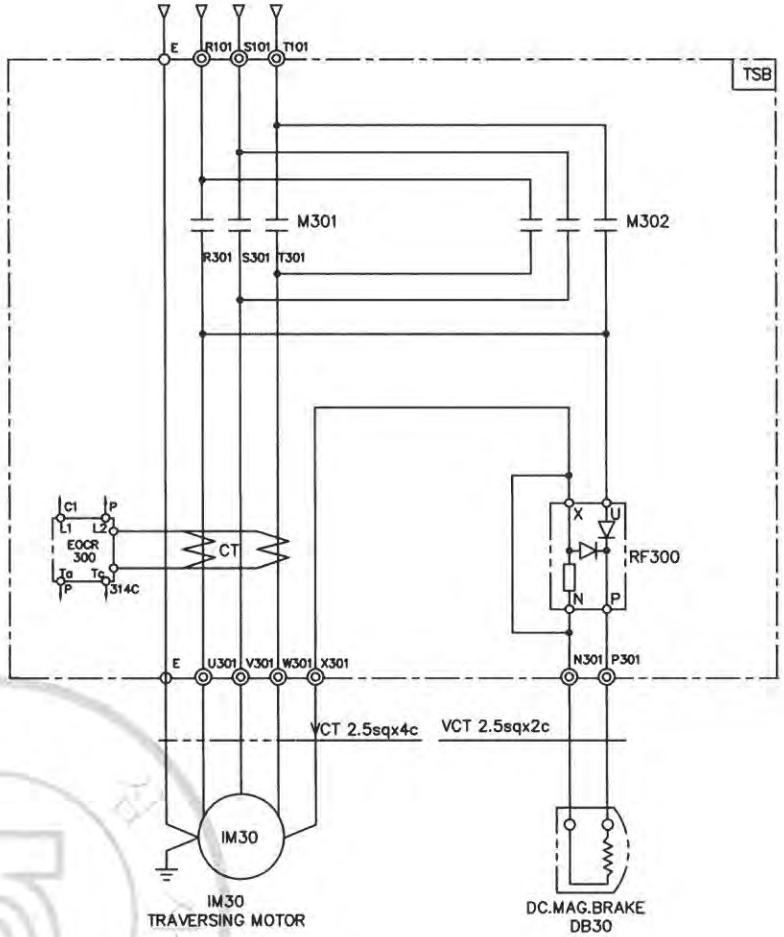

SPECIFICATION / SYMBOLS / DESCRIPTION	HOISTING POWER	TRAVERSING MOTOR	DC.MAG' BRAKE	TRANSFORMER	MAGNET CONTACTOR	UPPER LIMIT	ELECTRIC OVER CURRENT RELAY	SILICON RECTIFIER
	HOIST	IM 30	30	TR 300	M301,M302	LS-I	EOCR300	RF300
	7.5TON AC3PH 440,460,480V 60Hz	1.5KW x 4P	DC 100V	440,460,480/220V,100VA	DMC22b	AC 600V 75A	SS-05	SR-30
	7.5TON AC3PH 440,460,480V 60Hz	1.0KW x 6P	DC 100V	440,460,480/220V,100VA	DMC22b	AC 600V 75A	SS-05	SR-30
SELECTION MAKER	KUKDONG			SHINHAN	DONG-A	KUKDONG	ASECO	

REV	DATE	DESCRIPTION	DRAWN	CHECK	APPRVD
A	05.AUG.2016	REDRAWING	K.H.Han	-	-

TITLE
TRAVERSING CIRCUIT DIAGRAM
KD7.5-L

CUSTOMER

극동호이스트 주식회사
KUKDONG HOIST CO., LTD.

DESIGN	SCALE	SHT. NO.	ORDER NO.

DWG. NO.
KD75-TE41

192.168.11.51 / 2021-01-06 08:38:38

불법복제 및 배포금지

1	2	3	4	5	6	7	8	9	10	11	12	13	14	15	16	17	18	19	20

CONTROL CIRCUIT DIAGRAM

ADR'S NO.

E-STOP	LOAD LIMIT	UP	DOWN	EAST	WEST

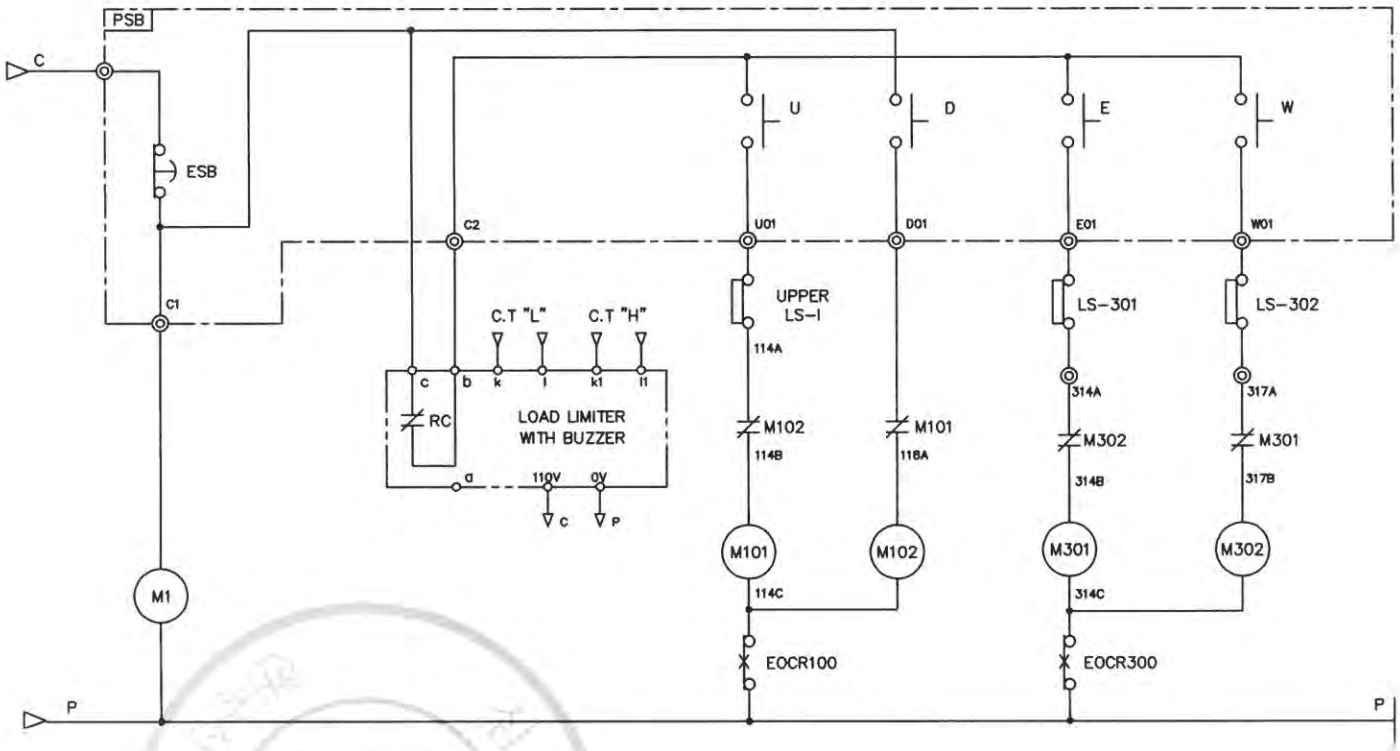

SPECIFICATION / SYMBOLS / DESCRIPTION	UPPER LIMIT	PENDANT P.B S/W	LOAD LIMITER	LIMIT SWITCH
	LS-1	E.S.B	LOAD LIMITER	LS-301,302
	AC 250V 10A	250V 3A	JDL-100	KG-L001
MAKER	HANYOUNG	KGAUTO	JEUNGHO	KGAUTO

REV	DATE	DESCRIPTION	DRAWN	CHECK	APPRVD
A	05.AUG.2016	REDRAWING	K.H.Han	-	-

TITLE
CONTROL CIRCUIT DIAGRAM
KD7.5-L

CUSTOMER

극동호이스트 주식회사
KUKDONG HOIST CO., LTD.

DESIGN	SCALE	SHT. NO.	ORDER NO.

DWG. NO.
KD75-E001

192.168.11.51 / 2021-01-06 08:38:38

불법복제 및 배포금지

1	2	3	4	5	6	7	8	9	10	11	12	13	14	15	16	17	18	19	20

CONTROL CIRCUIT DIAGRAM

ADR'S NO.

E-STOP	LOAD LIMIT	UP	DOWN	EAST	WEST	SOUTH	NORTH

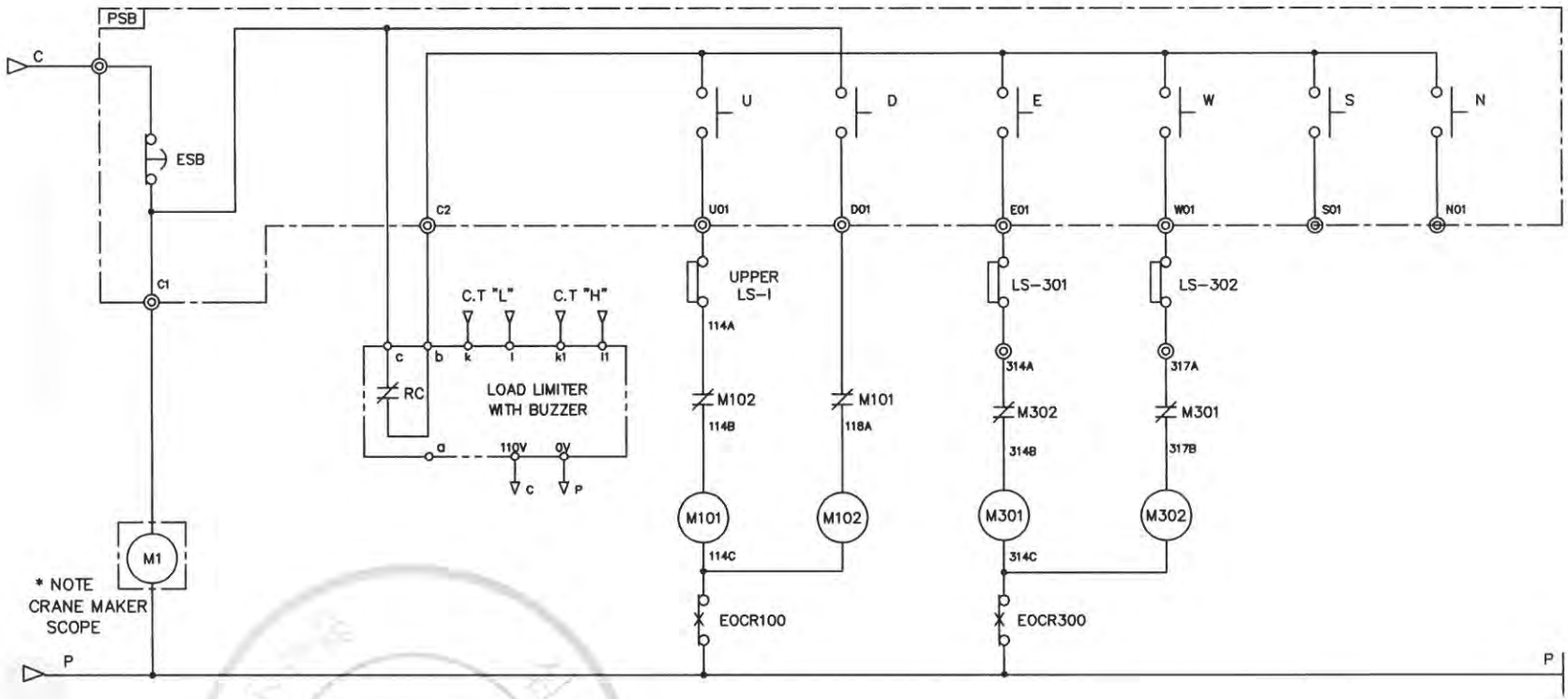

SPECIFICATION / SYMBOLS / DESCRIPTION	UPPER LIMIT	PENDANT P.B S/W	LOAD LIMITER	LIMIT SWITCH
	LS-1	E.S.B	LOAD LIMITER	LS-301,302
	AC 250V 10A	250V 3A	JDL-100	KG-L001
MAKER	HANYOUNG	KGAUTO	JEUNGHO	KGAUTO

REV	DATE	DESCRIPTION	DRAWN	CHECK	APPRVD
A	05.AUG.2016	REDRAWING	K.H.Han	-	-

TITLE
CONTROL CIRCUIT DIAGRAM
KD7.5-L

CUSTOMER

극동호이스트 주식회사
KUKDONG HOIST CO., LTD.

DESIGN	SCALE	SHT. NO.	ORDER NO.

DWG. NO.
KD75-E002

192.168.11.51 / 2021-01-06 08:38:38

불법복제 및 배포금지

ADR'S NO.

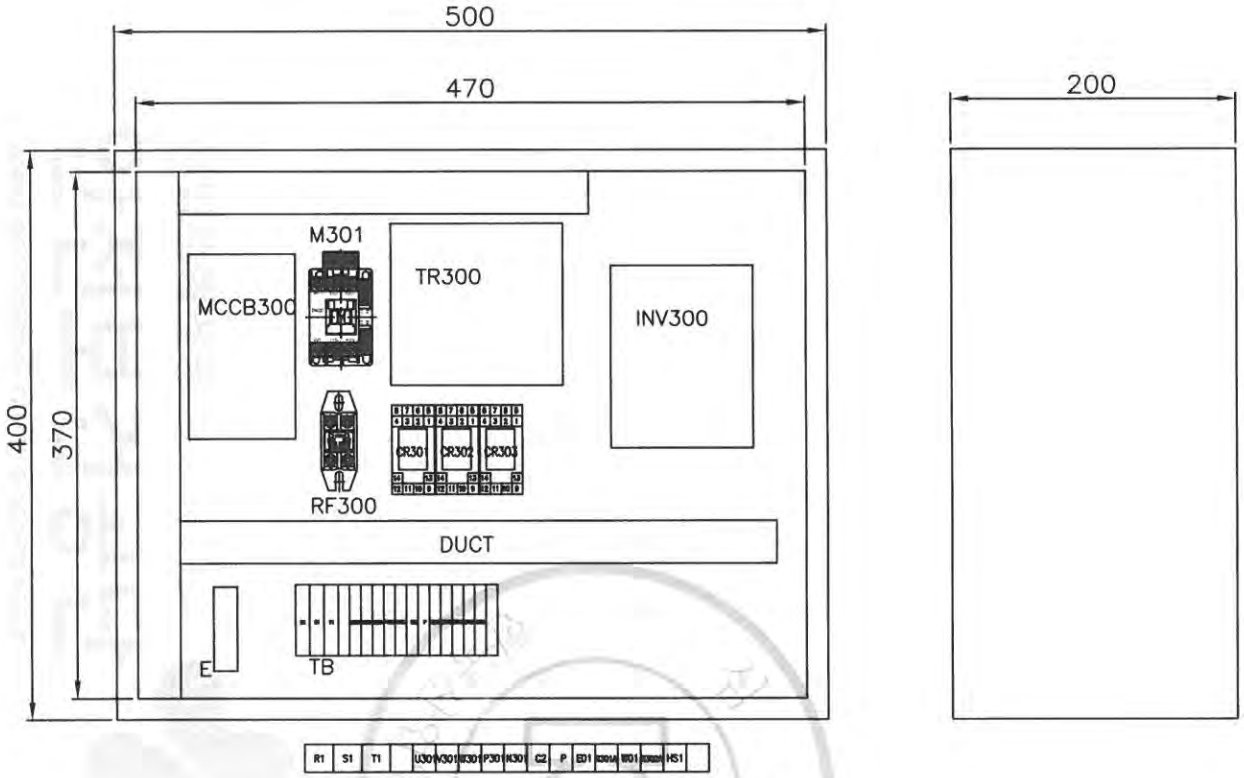

NO.	DESCRIPTION	MT'L	SPECIFICATION	QT'Y	REMARKS.
1	T/S BOX	PUR	500 x 400 x 200	1	
2	수 판	SS400	-	1	
3	MCCB	PUR	ABE-33AF/5AT(220V:10AT)	1	
4	MC	PUR	DMC22b	1	
5	RF	PUR	SR-30	1	
6	RELAY & SCOKET	PUR	MINI 4o4b (Coil AC110V)	1	
7	TR	PUR	220(380,440,460,480)/220V, 200VA	1	
8	INVERTER	PUR	SV015C5A	1	
9	TERMINAL BLOCK	PUR	15A	1	
10	DUCT	PUR	60 x 30	1	
11	EARTH BUS BAR	PUR	3t x 20 x 50	1	

192.168.11.51 / 2021-01-06 08:38:38

불법복제 및 배포금지

REV	DATE	DESCRIPTION	DRAWN	CHECK	APPRVD
A	23.DEC.2016	REDRAWING	K.H.Han	-	-

TITLE
TRAVERSING CONTROL PANEL (INVERTER)
KD5-L

CUSTOMER

극동호이스트 주식회사
KUKDONG HOIST CO., LTD.

DESIGN	SCALE	SHT. NO.	ORDER NO.

DWG. NO.
KD05EI001

1	2	3	4	5	6	7	8	9	10	11	12	13	14	15	16	17	18	19	20

TRAVERSING MOTION

ADR'S NO.

POWER CIRCUIT DIAGRAM

CONTROL CIRCUIT DIAGRAM

BRAKE | EAST | WEST | HIGH SPEED

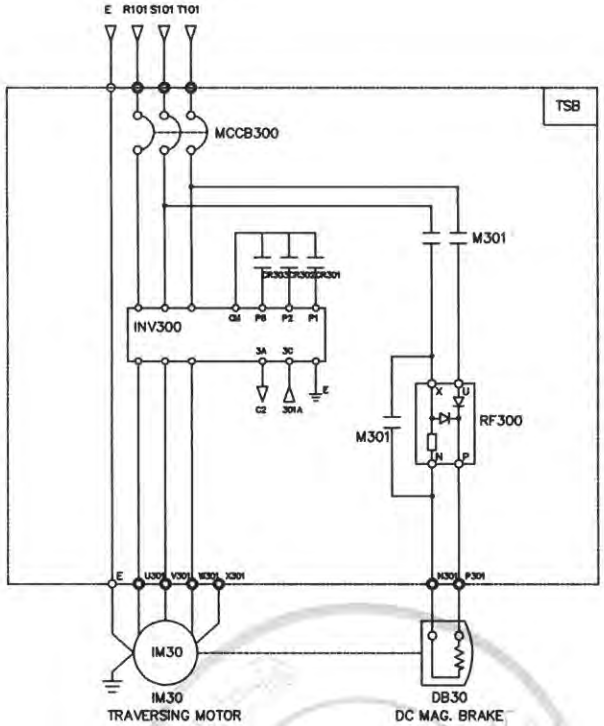

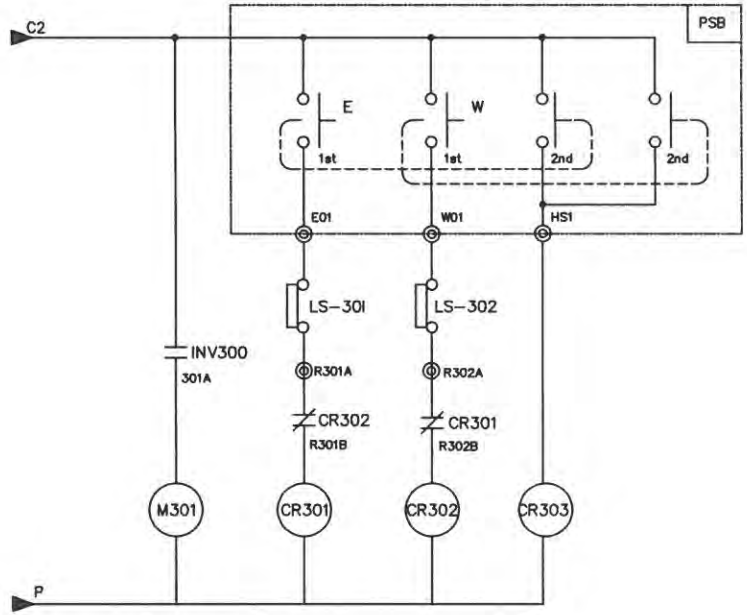

SPECIFICATION / SYMBOLS / DESCRIPTION	TRAVERSING POWER	TRAVERSING MOTOR	DC.MAG' BRAKE	NO FUSE BREAKER		BRAKE MAGNET	CONTROL RELAY	INVERTER	SILICON RECTIFIER	
		IM 30	DB30	MCCB300		M301	CR301,302,303	INV300	RF300	
	AC 3PH 220V 60Hz	1.0KW x 6P	DC 100V	30AF/15AT		DMC22b	MINI 4a4b(Coil AC110V)	SV015iG5A-2	SR-30	
SELECTION / MAKER	KUK DONG HOIST			LS		DONG-A	KACON	LS	ASAN	

REV	DATE	DESCRIPTION	DRAWN	CHECK	APPRVD
A	23.DEC.2016	REDRAWING	K.H.Han	-	-

TITLE
TRAVERSING POWER & CONTROL CIRCUIT DIAGRAM (INVERTER)
KD7.5-L

CUSTOMER

극동호이스트 주식회사
KUKDONG HOIST CO., LTD.

DESIGN	SCALE	SHT. NO.	ORDER NO.

DWG. NO.
KD55EI002-2

192.168.11.51 / 2021-01-06 08:38:38

불법복제 및 배포금지

1	2	3	4	5	6	7	8	9	10	11	12	13	14	15	16	17	18	19	20

TRAVERSING MOTION

ADR'S NO.

POWER CIRCUIT DIAGRAM

CONTROL CIRCUIT DIAGRAM

BRAKE	EAST	WEST	HIGH SPEED

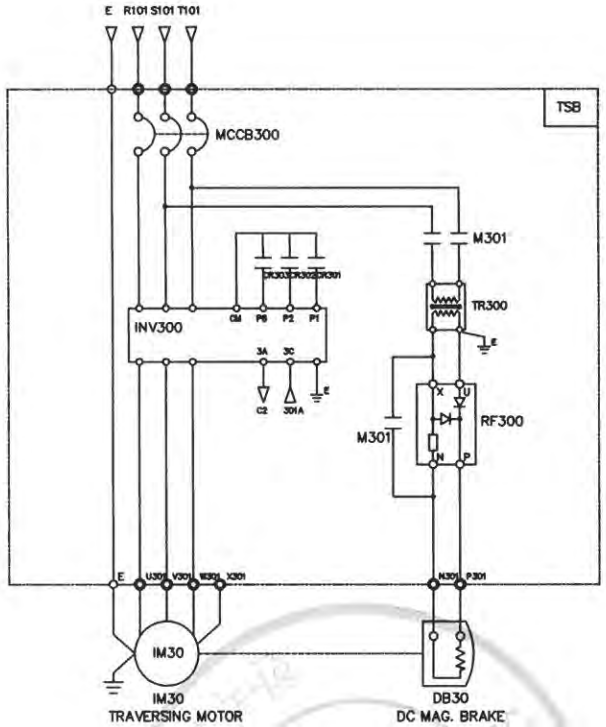

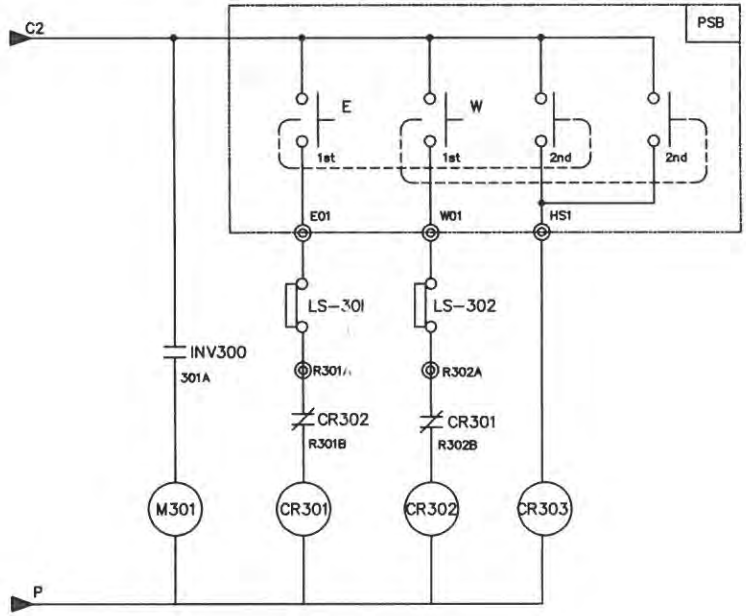

SPECIFICATION / SYMBOLS / DESCRIPTION	TRAVERSING POWER	TRAVERSING MOTOR	DC.MAG' BRAKE	NO FUSE BREAKER	TRANSFORMER	BRAKE MAGNET	CONTROL RELAY	INVERTER	SILICON RECTIFIER
		IM 30	DB30	MCCB300	TR 300	M301	CR301,302,303	INV300	RF300
	AC 3PH 380(440,460,480)V 60Hz	1.0KW x 6P	DC 100V	30AF/10AT	380(440,460,480)/220V,200VA	DMC22b	MINI 4a4b(Coil AC110V)	SV015iG5A-4	SR-30
SELECTION / MAKER	KUK DONG HOIST			LS	SHINHAN	DONG-A	KACON	LS	ASAN

REV	DATE	DESCRIPTION	DRAWN	CHECK	APPRVD
A	23.DEC.2016	REDRAWING	K.H.Han	-	-

TITLE
TRAVERSING POWER & CONTROL CIRCUIT DIAGRAM (INVERTER)
KD7.5-L

CUSTOMER

극동호이스트 주식회사
KUKDONG HOIST CO., LTD.

DESIGN	SCALE	SHT. NO.	ORDER NO.

DWG. NO.
KD75EI002-4

192.168.11.51 / 2021-01-06 08:38:38
불법복제 및 배포금지

1	2	3	4	5	6	7	8	9	10	11	12	13	14	15	16	17	18	19	20

TRAVERSING MOTION

ADR'S NO.

POWER CIRCUIT DIAGRAM

CONTROL CIRCUIT DIAGRAM

BRAKE | EAST | WEST | HIGH SPEED

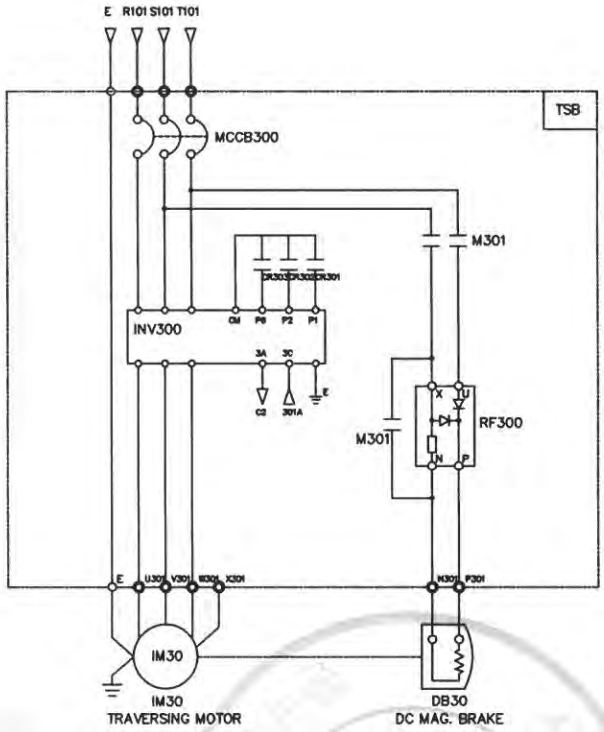

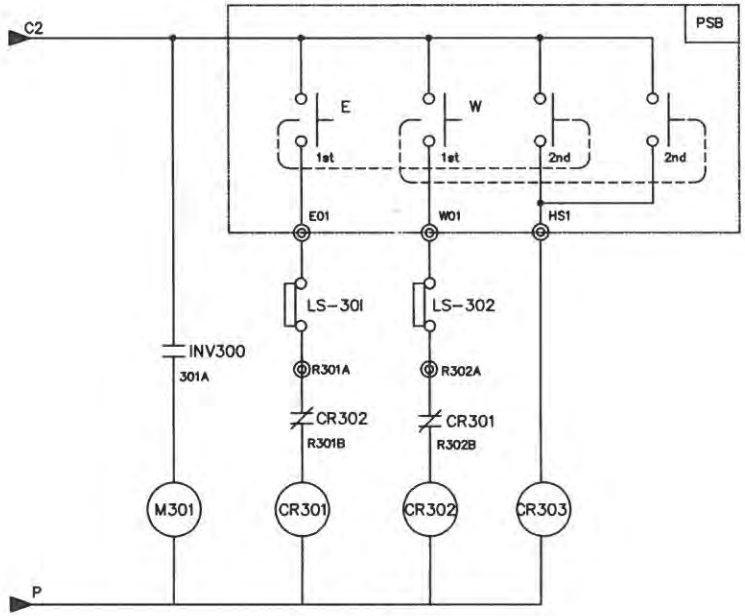

SPECIFICATION / SYMBOLS / DESCRIPTION	TRAVERSING POWER	TRAVERSING MOTOR	DC.MAG' BRAKE	NO FUSE BREAKER		BRAKE MAGNET	CONTROL RELAY	INVERTER	SILICON RECTIFIER	
		IM 30	DB30	MCCB300		M301	CR301,302,303	INV300	RF300	
	AC 3PH 220V 60Hz	1.5KW x 4P	DC 100V	30AF/15AT		DMC22b	MINI 4a4b(Coil AC110V)	SV015iG5A-2	SR-30	
SELECTION / MAKER	KUK DONG HOIST			LS		DONG-A	KACON	LS	ASAN	

REV	DATE	DESCRIPTION	DRAWN	CHECK	APPRVD
A	23.DEC.2016	REDRAWING	K.H.Han	-	-

TITLE
TRAVERSING POWER & CONTROL CIRCUIT DIAGRAM (INVERTER)
KD7.5-L

CUSTOMER

극동호이스트 주식회사
KUKDONG HOIST CO., LTD.

DESIGN	SCALE	SHT. NO.	ORDER NO.

DWG. NO.
KD75EI004-2

192.168.11.51 / 2021-01-06 08:38:38

불법복제 및 배포금지

1	2	3	4	5	6	7	8	9	10	11	12	13	14	15	16	17	18	19	20

TRAVERSING MOTION

ADR'S NO.

POWER CIRCUIT DIAGRAM

CONTROL CIRCUIT DIAGRAM

BRAKE | EAST | WEST | HIGH SPEED

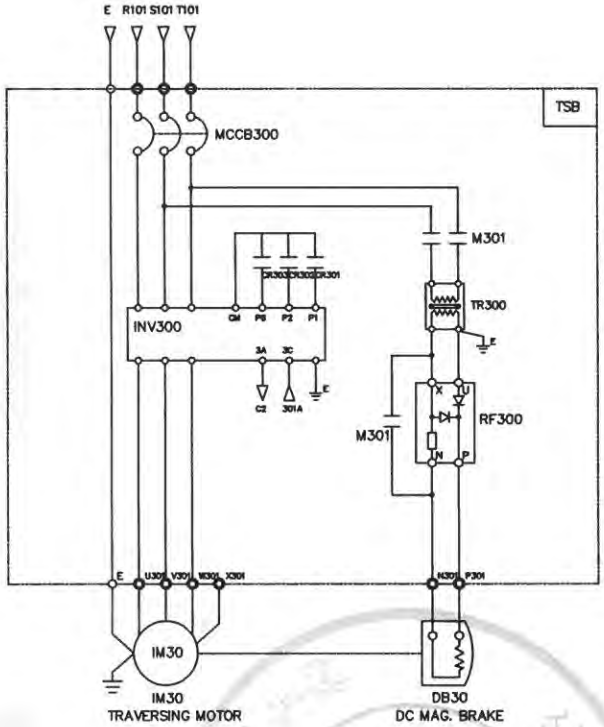

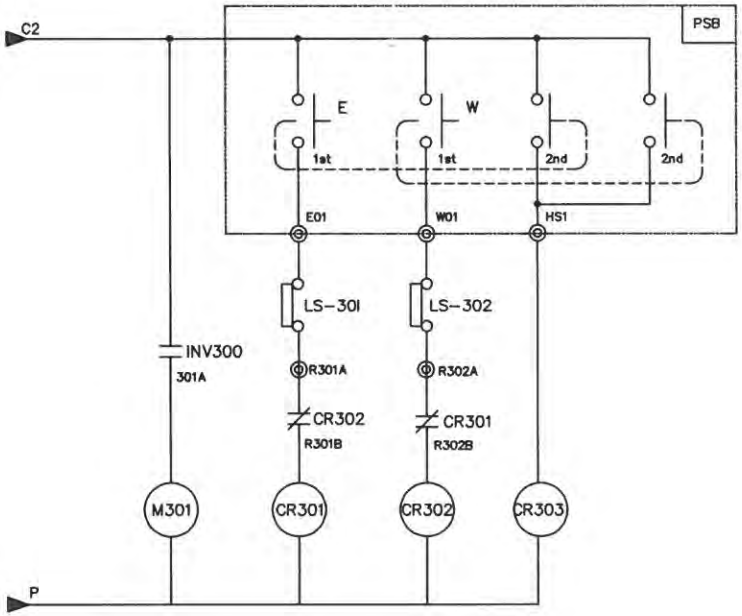

SPECIFICATION / SYMBOLS / DESCRIPTION	TRAVERSING POWER	TRAVERSING MOTOR	DC.MAG' BRAKE	NO FUSE BREAKER	TRANSFORMER	BRAKE MAGNET	CONTROL RELAY	INVERTER	SILICON RECTIFIER	
		IM 30	DB30	MCCB300	TR 300	M301	CR301,302,303	INV300	RF300	
	AC 3PH 380(440,460,480)V 60Hz	1.5KW x 4P	DC 100V	30AF/10AT	380(440,460,480)/220V,200VA	DMC22b	MINI 4a4b(Coil AC110V)	SV015iG5A-4	SR-30	
SELECTION / MAKER	KUK DONG HOIST			LS	SHINHAN	DONG-A	KACON	LS	ASAN	

REV	DATE	DESCRIPTION	DRAWN	CHECK	APPRVD
3	23.DEC.2016	REDRAWING	K.H.Han	-	-

TITLE
TRAVERSING POWER & CONTROL CIRCUIT DIAGRAM (INVERTER)
KD7.5-L

CUSTOMER

극동호이스트 주식회사
KUKDONG HOIST CO., LTD.

DESIGN	SCALE	SHT. NO.	ORDER NO.

DWG. NO.
KD75EI004-4

192.168.11.51 / 2021-01-06 08:38:38

불법복제 및 배포금지

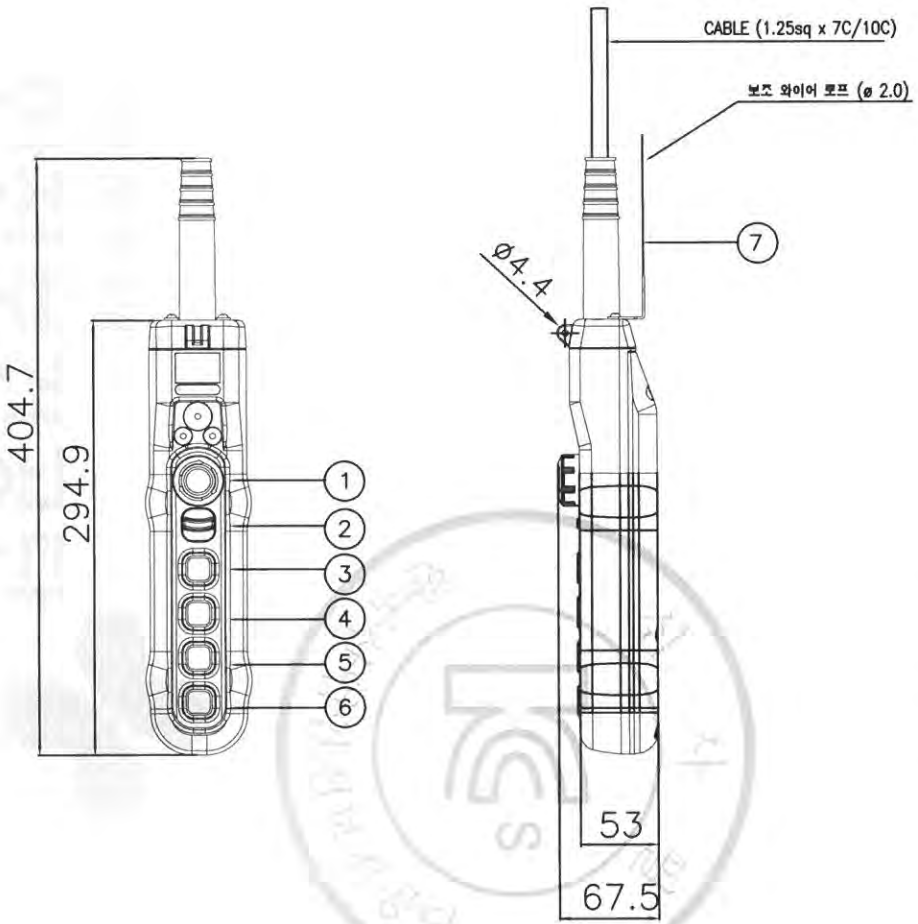

구분 / 색상	조작버튼	표시등
적색	비상	비상
황색	비정상	비정상
녹색	정상	정상
청색	의무	의무
흰색,회색-흑색	지정된의미없음	기타

* MATERIAL : POLYCARBOBATE(PLASTIC)
* BODY COLOR : YELLOW, BLACK
* IP : 55 이상

NO	SYMBOL	TYPE	SPEC.	COLOR
1	E.B.S	PUSH LOCK TURN RESET TYPE	250VAC x 6A	RED
2	SPARE			BLACK
3	상	1 BUTTON 1STEP		
4	하	1 BUTTON 1STEP		
5	동(전)	1 BUTTON 1STEP(2STEP)		
6	서(후)	1 BUTTON 1STEP(2STEP)		
7	보조와이어	ø 2.0		

MK	DATE	REVISIONS	CHK.	APP.	CUSTOMER		DRAWING	DESIGN	CHECKED	APPROVED	SCALE	DATE
					DRAWING TITLE	PENDANT PUSH BUTTON SWITCH						
						LAY OUT	KD KUK DONG HOIST CO., LTD.			DWG. NO	KD-E1001	

192.168.11.51 / 2021-01-06 08:38:38

불법복제 및 배포금지

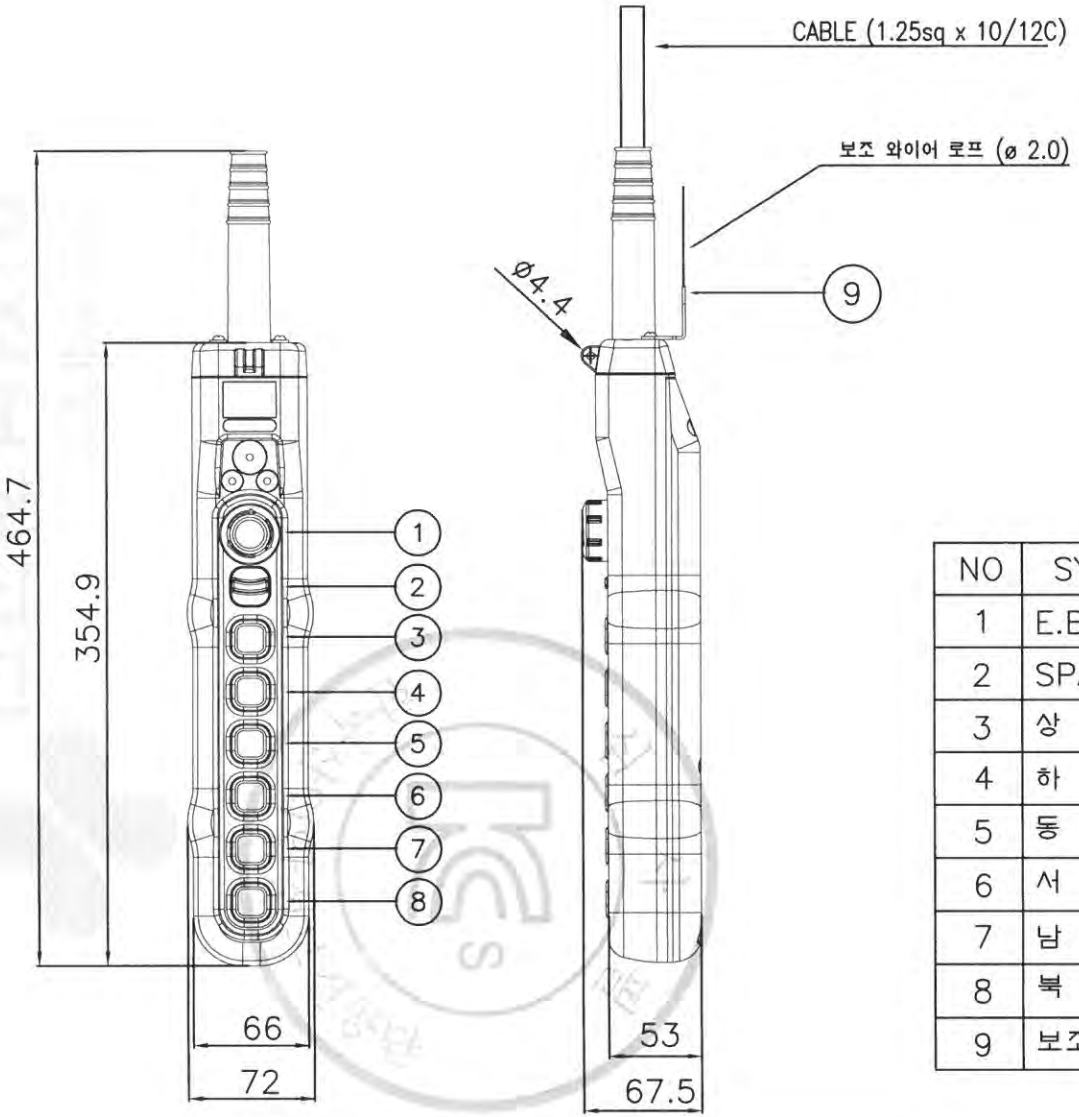

구분 / 색상	조작버튼	표시등
적색	비상	비상
황색	비정상	비정상
녹색	정상	정상
청색	의무	의무
흰색,회색-흑색	지정된의미없음	기타

* MATERIAL : POLYCARBOBATE(PLASTIC)
* BODY COLOR : YELLOW, BLACK
* IP : 55 이상

NO	SYMBOL	TYPE	SPEC.	COLOR
1	E.B.S	PUSH LOCK TURN RESET TYPE	250VAC x 6A	RED
2	SPARE			BLACK
3	상	1 BUTTON 1STEP		
4	하	1 BUTTON 1STEP		
5	동 (좌)	1 BUTTON 1STEP(2STEP)		
6	서 (우)	1 BUTTON 1STEP(2STEP)		
7	남 (전)	1 BUTTON 1STEP(2STEP)		
8	북 (후)	1 BUTTON 1STEP(2STEP)		
9	보조WIRE	ø 2.0		

MK	DATE	REVISIONS	CHK.	APP.	CUSTOMER		DRAWING	DESIGN	CHECKED	APPROVED	SCALE	DATE
					DRAWING TITLE	PENDANT PUSH BUTTON SWITCH						
						LAY OUT	KD KUK DONG HOIST CO., LTD.			DWG. NO	KD-E1002	

192.168.11.51 / 2021-01-06 08:38:38

불법복제 및 배포금지

불법복제 및 배포금지

I-BEAM 강도계산서

192.168.11.51 / 2021-01-06 08:38:38

불법복제 및 배포금지

I-BEAM 최대지지거리

☞ 최대지지거리 판정결과

I-BEAM 규격	최대 지지거리 (cm)	처짐량 판정1 > 800	처짐량 판정2 >1000	굽힘응력(kg/㎠) < 1159
200×150×t9/16	180	1586.4	1596.7	1131.3
300×150×t8/13	250	1744.3	1759.4	1143.4
300×150×t10/18.5	330	1332	1352.7	1129
300×150×t11.5/22	380	1156.6	1180.8	1133.6
350×150×t9/15	330	1596.9	1619	1122.6
350×150×t12/24	480	1094.8	1127.7	1126.9
400×150×t10/18	440	1411.8	1444	1122.8
400×150×t12.5/25	580	1051.1	1093.1	1146.4
450×175×t11/20	620	1136.4	1182.9	1135.2
450×175×t13/26	740	974.1	1033.7	1108
600×190×t13/25	990	1024.9	1122	1137.6
600×190×t16/35	1220	877.6	1013.1	1118

☞ 기본 조건

정격하중 (Kg)	양정 (m)	권상속도 (m/min)	호이스트		작업계수	풍력계수
			자중 (Kg)	풍압면적 (㎡)		
7500	12	3.7	1190	1.2	1.14	1.2

*첨부 강도계산서 참조

192.168.11.51 / 2021-01-06 08:38:38

불법복제 및 배포금지

[I-BEAM 최대 지지거리 강도계산서]

1. 굽힘 MOMENT 계산

1-1. 수직하중에 의한 굽힘 MOMENT

빔 자중에 의한 MOMENT : $Ms = \dfrac{\phi \times \text{BEAM자중(등분포하중)} \times \text{지지거리}}{8}$ (kg · cm)

※ 작업계수(φ) = 1.14

※ BEAM 자중 (kg) = BEAM 단위중량(kg/cm) x 지지거리(cm)

이동하중에 의한 MOMENT : $Md = \dfrac{\phi \times \Psi \times \text{이동하중} \times \text{지지거리}}{4}$ (kg · cm)

※ 이동하중 (kg) = 정격하중 + 호이스트 자중
= 7500 + 1190 = 8690 (kg)

※ 충격계수(Ψ) = 1 + 0.6V (단, Ψ <1.1 이면 Ψ = 1.1, Ψ > 1.6 이면 Ψ = 1.6 으로 한다.
= 1 + (0.6 x 0.062) = 1.0372 -----> 1.1

※ 권상속도(V) = $\dfrac{3.7}{60}$ (m/min) = 0.062 (m/sec)

수직하중에 의한 굽힘 MOMENT : ΣMv = Ms + Md

1-2. 풍하중에 의한 굽힘 MOMENT

풍하중에 의한 MOMENT : $Mw = \dfrac{\text{풍하중(W)} \times \text{지지거리}}{2}$

※풍하중 (W) = 속도압(q) x 풍력계수 x 풍압을 받는 면적 (A) (kg)

※속도압(q) : = 8.5 x $\sqrt[4]{h}$ = 15.8 (h= 양정: 12)

※풍력계수(C) = 1.2 (크레인 제작기준 참조)

※풍압을 받는 면적 (A) = I-BEAM의 풍압면적 + HOIST의 풍압면적 (㎡)

※HOIST의 풍압 면적 ≒ 1.2 (㎡)

2. 굽힘 응력 계산

2-1. 수직하중에 의한 굽힘 응력

$\sigma_v = \dfrac{\text{수직하중에 의한 굽힘MOMENT : } \Sigma Mv}{\text{단면 계수 : } Zx}$ (kg/㎠)

2-2. 풍하중에 의한 굽힘 응력

$\sigma_w = \dfrac{\text{풍하중에 의한 굽힘 MOMENT : } Mw}{\text{단면계수 : } Zy}$ (kg/㎠)

2-3.수직하중 및 풍하중에 의한 굽힘 응력

$\Sigma\sigma = \sigma_v + \sigma_w$

192.168.11.51 / 2021-01-06 08:38:38

표1. I-BEAM 최대지지거리에 따른 굽힘응력 계산 결과

I-BEAM 규격	최대지지거리(cm)	I-BEAM		단면계수		Ms	Md	ΣMv	I-BEAM 풍압면적 (㎡)	W (kg)	Mw (kg · cm)	σv (kg/㎠)	σw (kg/㎠)
		단위중량 (kg/cm)	자중 (kg)	Zx (㎤)	Zy (㎤)	(kg · cm)	(kg · cm)	(kg · cm)					
200×150×t9/16	180	0.504	90.72	446	100	2326.97	490376.70	492703.67	0.36	29.58	2661.98	1104.72	26.62
300×150×t8/13	250	0.483	120.75	632	78.4	4301.72	681078.75	685380.47	0.75	36.97	4621.50	1084.46	58.95
300×150×t10/18.5	330	0.655	216.15	849	118	10164.45	899023.95	909188.40	0.99	41.52	6851.20	1070.89	58.06
300×150×t11.5/22	380	0.768	291.84	978	143	15803.14	1035239.70	1051042.84	1.14	44.37	8429.62	1074.69	58.95
350×150×t9/15	330	0.585	193.05	870	93.5	9078.18	899023.95	908102.13	1.16	44.65	7367.38	1043.80	78.80
350×150×t12/24	480	0.872	418.56	1280	158	28629.50	1307671.20	1336300.70	1.68	54.60	13105.15	1043.98	82.94
400×150×t10/18	440	0.72	316.8	1200	115	19863.36	1198698.60	1218561.96	1.76	56.12	12346.75	1015.47	107.36
400×150×t12.5/25	580	0.958	555.64	1580	165	45923.65	1580102.70	1626026.35	2.32	66.74	19354.37	1029.13	117.30
450×175×t11/20	620	0.917	568.54	1740	173	50230.51	1689075.30	1739305.81	2.79	75.65	23451.62	999.60	135.56
450×175×t13/26	740	1.15	851	2170	231	89737.95	2015993.10	2105731.05	3.33	85.89	31778.86	970.38	137.57
600×190×t13/25	990	1.33	1316.7	3280	259	185753.45	2697071.85	2882825.30	5.94	135.37	67010.33	878.91	258.73
600×190×t16/35	1220	1.76	2147.2	4330	373	373290.72	3323664.30	3696955.02	7.32	161.54	98538.91	853.80	264.18

무단복제 및 배포금지

192.168.11.51 / 2021-01-06 08:38:38

불법복제 및 배포금지

[I-BEAM의 처짐량(Deflection) 및 최대굽힘응력 판정 결과]

1. 처짐량 판정 1
   판정기준: $L / \sigma > 800$
   ※ $\sigma = \sigma_s + \sigma_d$

2. 처짐량 판정 2
   판정기준: $L / \sigma_d > 1000$

3. 최대굽힘응력 판정
   판정기준: $\Sigma\sigma \leq 1159$ (kg/㎠) (= SS400 허용굽힘응력 1449 x 0.8)
   ※ $\Sigma\sigma = \sigma_v + \sigma_w$

※I-BEAM 자중에 의한 처짐(σs)

$$\sigma_s = \frac{5 \times \text{I-Beam자중} \times \text{지지거리}^3}{384 \times E \times Ix}$$

※이동하중에 의한 처짐(σd)

$$\sigma_d = \frac{(\text{정격하중} + \text{호이스트 자중}) \times \text{지지거리}^3}{48 \times E \times Ix}$$

E = 종탄성계수 (2,100,000 kg/㎠)
Ix = 단면2차MOMENT

					판정기준		
					> 800	> 1000	≤ 1159
I-BEAM 규격	Ix (cm^4)	최대지지거리(cm)	σs (cm)	σd (cm)	처짐량판정1	처짐량판정2	$\Sigma\sigma$ (kg/㎠)
200×150×t9/16	4460	180	0.0007	0.1127	1586.4	1596.7	1131.3
300×150×t8/13	9480	250	0.0012	0.1421	1744.3	1759.4	1143.4
300×150×t10/18.5	12700	330	0.0038	0.2439	1332	1352.7	1129
300×150×t11.5/22	14700	380	0.0068	0.3218	1156.6	1180.8	1133.6
350×150×t9/15	15200	330	0.0028	0.2038	1596.9	1619	1122.6
350×150×t12/24	22400	480	0.0128	0.4256	1094.8	1127.7	1126.9
400×150×t10/18	24100	440	0.0069	0.3047	1411.8	1444	1122.8
400×150×t12.5/25	31700	580	0.0212	0.5306	1051.1	1093.1	1146.4
450×175×t11/20	39200	620	0.0214	0.5241	1136.4	1182.9	1135.2
450×175×t13/26	48800	740	0.0438	0.7159	974.1	1033.7	1108
600×190×t13/25	94800	990	0.0836	0.8824	1024.9	1122	1137.6
600×190×t16/35	130000	1220	0.1860	1.2042	877.6	1013.1	1118

192.168.11.51 / 2021-01-06 08:38:38

불법복제 및 배포금지

▣ I-BEAM의 고정방법 및 사양

1. I-BEAM의 고정방법

용접구조	BOLT 체결구조	복합구조
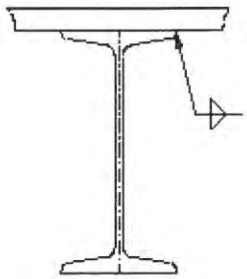	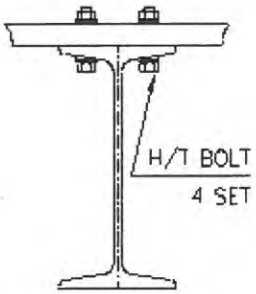	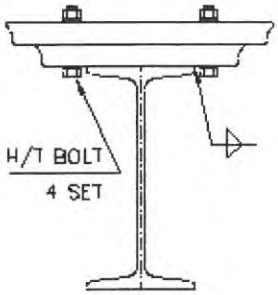

2. 기본조건 및 사양

* 용접이음의 허용응력(필렛용접 효율 포함) : 560kg/㎠
* 필렛 용접효율 : 80%
* H/T BOLT의 허용 인장응력 : 2,500kg/㎠

단위: mm

정격하중(Kg)	용접구조		BOLT 체결구조
	최소 용접두께	최소 용접길이	최소 BOLT SIZE
7500	8	190	M16 x 4

단, 적용 I-BEAM 600×190×t16/35 의 경우임

※강도계산서 참조

안전보건공단

192.168.11.51 / 2021-01-06 08:38:38

불법복제 및 배포금지

[I-BEAM 고정볼트 강도 및 용접강도 계산서]

1) I-BEAM 고정방법중 BOLT구조의 강도 계산

[H/T BOLT의 허용인장응력 : 2500 kg/㎠]

☞ 작용하중 계산

$P = \Psi \times (Q+Q1) + \phi \times Q2$

충격계수 Ψ =	1.1
작업계수 ϕ =	1.14
정격하중 Q =	7500
HOIST자중 Q1 =	1190

☞ BOLT 1 개당 인장강도 계산

$$\sigma = \frac{P}{A} = 4 \times \frac{P}{(\pi \times d2 \times z)}$$

※ 판정기준: $\sigma < 2500$ kg/㎠

BEAM 규격	BEAM자중 (kg)	하중 P(kg)	BOLT 규격	BOLT수	BOLT 단면적 (㎠)	BOLT강도
200×150×t9/16	90.72	9662.4	M16	4	2.01	1201.8
300×150×t8/13	120.75	9696.7	M16	4	2.01	1206.1
300×150×t10/18.5	216.15	9805.4	M16	4	2.01	1219.6
300×150×t11.5/22	291.84	9891.7	M16	4	2.01	1230.3
350×150×t9/15	193.05	9779.1	M16	4	2.01	1216.3
350×150×t12/24	418.56	10036.2	M16	4	2.01	1248.3
400×150×t10/18	316.8	9920.2	M16	4	2.01	1233.9
400×150×t12.5/25	555.64	10192.4	M16	4	2.01	1267.7
450×175×t11/20	568.54	10207.1	M16	4	2.01	1269.5
450×175×t13/26	851	10529.1	M16	4	2.01	1309.6
600×190×t13/25	1316.7	11060	M16	4	2.01	1375.6
600×190×t16/35	2147.2	12006.8	M16	4	2.01	1493.4

인천보건공단

192.168.11.51 / 2021-01-06 08:38:38

불법복제 및 배포금지

2) I-BEAM 고정방법중 용접구조의 강도 계산

[용접이음의 허용응력: 560 kg/㎠]

☞ 용접강도 계산

$$\sigma w = \frac{P}{0.707 x t x 2 x l} \quad kg/㎠$$

※ 판정기준: σw < 560 kg/㎠

BEAM 규격	하중 P(kg)	용접두께 t(cm)	용접길이 l(cm)	용접강도 σw(kg/㎠)
200×150×t9/16	9662.4	1	15	455.6
300×150×t8/13	9696.7	1	15	457.2
300×150×t10/18.5	9805.4	1	15	462.3
300×150×t11.5/22	9891.7	1	15	466.4
350×150×t9/15	9779.1	1	15	461.1
350×150×t12/24	10036.2	1	15	473.2
400×150×t10/18	9920.2	1	15	467.7
400×150×t12.5/25	10192.4	1	15	480.5
450×175×t11/20	10207.1	0.8	17.5	515.6
450×175×t13/26	10529.1	0.8	17.5	531.9
600×190×t13/25	11060	0.8	19	514.6
600×190×t16/35	12006.8	0.8	19	558.6

192.168.11.51 / 2021-01-06 08:38:38

불법복제 및 배포금지

Ⅳ. 참고자료

192.168.11.51 / 2021-01-06 08:38:38

E.O.C.R 권고 SETTING치

* POWER SOURCE : AC 3¢ 220V 60Hz

극동호이스트(주)

HOIST	MOTOR 용량	MOTOR 정격 전류	DRIVE TYPE	E.O.C.R TYPE	권고 SETTING 치			REMARK
					DELAY TIME	OPERATION TIME	CURRENT	
0.5 TON	1.2KW x 8P	8.0 A	1 DRIVE	SS-30	3 SEC	1 SEC	8.8 A	
	1.5KW x 6P	7.6 A	1 DRIVE	SS-30	3 SEC	1 SEC	8.4 A	
	2.4KW x 4P	10.0 A	1 DRAVE	SS-30	3 SEC	1 SEC	11.0 A	
1 TON	1.2KW x 8P	8.0 A	1 DRIVE	SS-30	3 SEC	1 SEC	8.8 A	
	2.4KW x 4P	10.0 A	1 DRAVE	SS-30	3 SEC	1 SEC	11.0 A	
2 TON	1.8KW x 8P	11.0 A	1 DRAVE	SS-30	3 SEC	1 SEC	12.1 A	
	2.5KW x 6P	12.0 A	1 DRAVE	SS-30	3 SEC	1 SEC	13.2 A	
	3.7KW x 4P	16.0 A	1 DRAVE	SS-30	3 SEC	1 SEC	17.6 A	
2.8 TON	2.5KW x 8P	17.7 A	1 DRAVE	SS-30	3 SEC	1 SEC	19.5 A	
	5.0KW x 4P	23.0 A	1 DRAVE	SS-30	3 SEC	1 SEC	25.3 A	
3 TON	2.8KW x 8P	17.7 A	1 DRAVE	SS-30	3 SEC	1 SEC	19.5 A	
	5.5KW x 4P	22.8 A	1 DRAVE	SS-30	3 SEC	1 SEC	25.1 A	
5 TON	4.2KW x 8P	23.0 A	1 DRAVE	SS-30	3 SEC	1 SEC	25.3 A	
	5.5KW x 6P	28.2 A	1 DRAVE	SS-60	3 SEC	1 SEC	31.0 A	
	8.5KW x 4P	34.4 A	1 DRAVE	SS-60	3 SEC	1 SEC	37.8 A	
7.5 TON	4.2KW x 8P	23.0 A	1 DRAVE	SS-30	3 SEC	1 SEC	25.3 A	
	5.5KW x 6P	28.2 A	1 DRAVE	SS-60	3 SEC	1 SEC	31.0 A	

NOTE

1. 상기 TABLE의 수치는 권고 SETTING 수치이며 MOTOR의 특성 및 현장 조건에 따라 변경 가능함.

무단복제 및 배포금지

192.168.11.51 / 2021-01-06 08:38:38

E.O.C.R 권고 SETTING치

* POWER SOURCE : AC 3¢ 380V 60Hz

극동호이스트(주)

HOIST	MOTOR 용량	MOTOR 정격 전류	DRIVE TYPE	E.O.C.R TYPE	권고 SETTING 치			REMARK
					DELAY TIME	OPERATION TIME	CURRENT	
0.5 TON	1.2KW x 8P	4.6 A	1 DRIVE	SS-30	3 SEC	1 SEC	5.1 A	
	1.5KW x 6P	5.5 A	1 DRIVE	SS-30	3 SEC	1 SEC	6.1 A	
	2.4KW x 4P	5.6 A	1 DRAVE	SS-30	3 SEC	1 SEC	6.2 A	
1 TON	1.2KW x 8P	4.6 A	1 DRIVE	SS-30	3 SEC	1 SEC	5.1 A	
	2.4KW x 4P	5.6 A	1 DRAVE	SS-30	3 SEC	1 SEC	6.2 A	
2 TON	1.8KW x 8P	6.4 A	1 DRAVE	SS-30	3 SEC	1 SEC	7.0 A	
	2.5KW x 6P	7.0 A	1 DRAVE	SS-30	3 SEC	1 SEC	7.7 A	
	3.7KW x 4P	9.3 A	1 DRAVE	SS-30	3 SEC	1 SEC	10.2 A	
2.8 TON	2.5KW x 8P	10.3 A	1 DRAVE	SS-30	3 SEC	1 SEC	11.3 A	
	5.0KW x 4P	12.2 A	1 DRAVE	SS-30	3 SEC	1 SEC	13.4 A	
3 TON	2.8KW x 8P	10.3 A	1 DRAVE	SS-30	3 SEC	1 SEC	11.3 A	
	5.5KW x 4P	12.2 A	1 DRAVE	SS-30	3 SEC	1 SEC	13.4 A	
5 TON	4.2KW x 8P	13.3 A	1 DRAVE	SS-30	3 SEC	1 SEC	14.6 A	
	5.5KW x 6P	16.3 A	1 DRAVE	SS-30	3 SEC	1 SEC	17.9 A	
	8.5KW x 4P	19.9 A	1 DRAVE	SS-30	3 SEC	1 SEC	21.9 A	
7.5 TON	4.2KW x 8P	13.3 A	1 DRAVE	SS-30	3 SEC	1 SEC	14.6 A	
	5.5KW x 6P	16.3 A	1 DRAVE	SS-30	3 SEC	1 SEC	17.9 A	

NOTE

1. 상기 TABLE의 수치는 권고 SETTING 수치이며 MOTOR의 특성 및 현장 조건에 따라 변경 가능함.

불법복제 및 배포금지

192.168.11.51 / 2021-01-06 08:38:38

E.O.C.R 권고 SETTING치

* POWER SOURCE : AC 3¢ 440V 60Hz

극동호이스트(주)

HOIST	MOTOR 용량	MOTOR 정격 전류	DRIVE TYPE	E.O.C.R TYPE	권고 SETTING 치			REMARK
					DELAY TIME	OPERATION TIME	CURRENT	
0.5 TON	1.2KW x 8P	4.0 A	1 DRIVE	SS-05	3 SEC	1 SEC	4.4 A	
	1.5KW x 6P	3.8 A	1 DRIVE	SS-05	3 SEC	1 SEC	4.2 A	
	2.4KW x 4P	5.0 A	1 DRAVE	SS-30	3 SEC	1 SEC	5.5 A	
1 TON	1.2KW x 8P	4.0 A	1 DRIVE	SS-05	3 SEC	1 SEC	4.4 A	
	2.4KW x 4P	5.0 A	1 DRAVE	SS-30	3 SEC	1 SEC	5.5 A	
2 TON	1.8KW x 8P	5.5 A	1 DRAVE	SS-30	3 SEC	1 SEC	6.1 A	
	2.5KW x 6P	5.8 A	1 DRAVE	SS-30	3 SEC	1 SEC	6.4 A	
	3.7KW x 4P	8.0 A	1 DRAVE	SS-30	3 SEC	1 SEC	8.8 A	
2.8 TON	2.5KW x 8P	8.9 A	1 DRAVE	SS-30	3 SEC	1 SEC	9.8 A	
	5.0KW x 4P	10.5 A	1 DRAVE	SS-30	3 SEC	1 SEC	11.6 A	
3 TON	2.8KW x 8P	8.9 A	1 DRAVE	SS-30	3 SEC	1 SEC	9.8 A	
	5.5KW x 4P	10.5 A	1 DRAVE	SS-30	3 SEC	1 SEC	11.6 A	
5 TON	4.2KW x 8P	11.5 A	1 DRAVE	SS-30	3 SEC	1 SEC	12.7 A	
	5.5KW x 6P	14.1 A	1 DRAVE	SS-30	3 SEC	1 SEC	15.5 A	
	8.5KW x 4P	16.5 A	1 DRAVE	SS-30	3 SEC	1 SEC	18.2 A	
7.5 TON	4.2KW x 8P	11.5 A	1 DRAVE	SS-30	3 SEC	1 SEC	12.7 A	
	5.5KW x 6P	14.1 A	1 DRAVE	SS-30	3 SEC	1 SEC	15.5 A	

NOTE

1. 상기 TABLE의 수치는 권고 SETTING 수치이며 MOTOR의 특성 및 현장 조건에 따라 변경 가능함.

불법복제 및 배포금지

192.168.11.51 / 2021-01-06 08:38:38

E.O.C.R 권고 SETTING치

* POWER SOURCE : AC 3¢ 460V 60Hz

극동호이스트(주)

HOIST	MOTOR 용량	MOTOR 정격 전류	DRIVE TYPE	E.O.C.R TYPE	권고 SETTING 치			REMARK
					DELAY TIME	OPERATION TIME	CURRENT	
0.5 TON	1.2KW x 8P	3.8 A	1 DRIVE	SS-05	3 SEC	1 SEC	4.2 A	
	1.5KW x 6P	3.6 A	1 DRIVE	SS-05	3 SEC	1 SEC	4.0 A	
	2.4KW x 4P	4.8 A	1 DRAVE	SS-30	3 SEC	1 SEC	5.3 A	
1 TON	1.2KW x 8P	3.8 A	1 DRAVE	SS-05	3 SEC	1 SEC	4.2 A	
	2.4KW x 4P	4.8 A	1 DRAVE	SS-30	3 SEC	1 SEC	5.3 A	
2 TON	1.8KW x 8P	5.3 A	1 DRAVE	SS-30	3 SEC	1 SEC	5.8 A	
	2.5KW x 6P	5.5 A	1 DRAVE	SS-30	3 SEC	1 SEC	6.1 A	
	3.7KW x 4P	7.7 A	1 DRAVE	SS-30	3 SEC	1 SEC	8.5 A	
2.8 TON	2.5KW x 8P	7.7 A	1 DRAVE	SS-30	3 SEC	1 SEC	8.5 A	
	5.0KW x 4P	10.0 A	1 DRAVE	SS-30	3 SEC	1 SEC	11.0 A	
3 TON	2.8KW x 8P	7.7 A	1 DRAVE	SS-30	3 SEC	1 SEC	8.5 A	
	5.5KW x 4P	10.0 A	1 DRAVE	SS-30	3 SEC	1 SEC	11.0 A	
5 TON	4.2KW x 8P	11.0 A	1 DRAVE	SS-30	3 SEC	1 SEC	12.1 A	
	5.5KW x 6P	13.5 A	1 DRAVE	SS-30	3 SEC	1 SEC	14.9 A	
	8.5KW x 4P	16.5 A	1 DRAVE	SS-30	3 SEC	1 SEC	18.2 A	
7.5 TON	4.2KW x 8P	11.0 A	1 DRAVE	SS-30	3 SEC	1 SEC	12.1 A	
	5.5KW x 6P	13.5 A	1 DRAVE	SS-30	3 SEC	1 SEC	14.9 A	

NOTE

1. 상기 TABLE의 수치는 권고 SETTING 수치이며 MOTOR의 특성 및 현장 조건에 따라 변경 가능함.

불법복제 및 배포금지

192.168.11.51 / 2021-01-06 08:38:38

E.O.C.R 권고 SETTING치

* POWER SOURCE : AC 3¢ 480V 60Hz

극동호이스트(주)

HOIST	MOTOR 용량	MOTOR 정격 전류	DRIVE TYPE	E.O.C.R TYPE	권고 SETTING 치			REMARK
					DELAY TIME	OPERATION TIME	CURRENT	
0.5 TON	1.2KW x 8P	3.6 A	1 DRIVE	SS-05	3 SEC	1 SEC	4.0 A	
	1.5KW x 6P	3.5 A	1 DRIVE	SS-05	3 SEC	1 SEC	3.9 A	
	2.4KW x 4P	4.6 A	1 DRAVE	SS-30	3 SEC	1 SEC	5.1 A	
1 TON	1.2KW x 8P	3.6 A	1 DRIVE	SS-05	3 SEC	1 SEC	4.0 A	
	2.4KW x 4P	4.6 A	1 DRAVE	SS-30	3 SEC	1 SEC	5.1 A	
2 TON	1.8KW x 8P	5.1 A	1 DRAVE	SS-30	3 SEC	1 SEC	5.6 A	
	2.5KW x 6P	5.3 A	1 DRAVE	SS-30	3 SEC	1 SEC	5.8 A	
	3.7KW x 4P	7.3 A	1 DRAVE	SS-30	3 SEC	1 SEC	8.0 A	
2.8 TON	2.5KW x 8P	7.3 A	1 DRAVE	SS-30	3 SEC	1 SEC	8.0 A	
	5.0KW x 4P	9.6 A	1 DRAVE	SS-30	3 SEC	1 SEC	10.6 A	
3 TON	2.8KW x 8P	7.3 A	1 DRAVE	SS-30	3 SEC	1 SEC	8.0 A	
	5.5KW x 4P	9.6 A	1 DRAVE	SS-30	3 SEC	1 SEC	10.6 A	
5 TON	4.2KW x 8P	10.5 A	1 DRAVE	SS-30	3 SEC	1 SEC	11.6 A	
	5.5KW x 6P	12.9 A	1 DRAVE	SS-30	3 SEC	1 SEC	14.2 A	
	8.5KW x 4P	15.8 A	1 DRAVE	SS-30	3 SEC	1 SEC	17.4 A	
7.5 TON	4.2KW x 8P	10.5 A	1 DRAVE	SS-30	3 SEC	1 SEC	11.6 A	
	5.5KW x 6P	12.9 A	1 DRAVE	SS-30	3 SEC	1 SEC	14.2 A	

NOTE

1. 상기 TABLE의 수치는 권고 SETTING 수치이며 MOTOR의 특성 및 현장 조건에 따라 변경 가능함.

무단복제 및 배포금지

192.168.11.51 / 2021-01-06 08:38:38

LOAD LIMITER 권고 SETTING치

* POWER SOURCE : AC 3¢ 220V 60Hz

극동호이스트(주)

HOIST	MOTOR 용량	LOAD LIMITER 권고 SETTING치			LOAD CURRENT		C.T MODEL	연결단자 NO	C.T 용량	REMARK
		LOAD CURRENT	ADJ START TIME	SHOCK TIME	100%	110%				
0.5 TON	1.2KW x 8P	110%	1 SEC	1 SEC	8.0 A	8.8 A	CT-1	K, L	5 V.A	
	1.5KW x 6P	110%	1 SEC	1 SEC	7.6 A	8.4 A	CT-1	K, L	5 V.A	
	2.4KW x 4P	110%	1 SEC	1 SEC	10.0 A	11.0 A	CT-1	K, L	5 V.A	
1 TON	1.2KW x 8P	110%	1 SEC	1 SEC	8.0 A	8.8 A	CT-1	K, L	5 V.A	
	2.4KW x 4P	110%	1 SEC	1 SEC	10.0 A	11.0 A	CT-1	K, L	5 V.A	
2 TON	1.8KW x 8P	110%	1 SEC	1 SEC	11.0 A	12.1 A	CT-1	K, L	5 V.A	
	2.5KW x 6P	110%	1 SEC	1 SEC	12.0 A	13.2 A	CT-1	K, L	5 V.A	
	3.7KW x 4P	110%	1 SEC	1 SEC	16.0 A	17.6 A	CT-1	K, L	5 V.A	
2.8 TON	2.5KW x 8P	110%	1 SEC	1 SEC	17.7 A	19.5 A	CT-1	K, L	5 V.A	
	5.0KW x 4P	110%	1 SEC	1 SEC	23.0 A	25.3 A	CT-1	K, L	5 V.A	
3 TON	2.8KW x 8P	110%	1 SEC	1 SEC	17.7 A	19.5 A	CT-1	K, L	5 V.A	
	5.5KW x 4P	110%	1 SEC	1 SEC	22.8 A	25.1 A	CT-1	K, L	5 V.A	
5 TON	4.2KW x 8P	110%	1 SEC	1 SEC	23.0 A	25.3 A	CT-1	K, L	5 V.A	
	5.5KW x 6P	110%	1 SEC	1 SEC	28.2 A	31.0 A	CT-1	K, L	5 V.A	
	8.5KW x 4P	110%	1 SEC	1 SEC	34.4 A	37.8 A	CT-1	K, L	5 V.A	
7.5 TON	4.2KW x 8P	110%	1 SEC	1 SEC	23.0 A	25.3 A	CT-1	K, L	5 V.A	
	5.5KW x 6P	110%	1 SEC	1 SEC	28.2 A	31.0 A	CT-1	K, L	5 V.A	

NOTE

1. 상기 TABLE의 수치는 권고 SETTING 수치이며 MOTOR의 특성 및 현장 조건에 따라 변경 가능함.

불법복제 및 배포금지

192.168.11.51 / 2021-01-06 08:38:38

LOAD LIMITER 권고 SETTING치

* POWER SOURCE : AC 3¢ 380V 60Hz

극동호이스트(주)

HOIST	MOTOR 용량	LOAD LIMITER 권고 SETTING치			LOAD CURRENT		C.T MODEL	연결단자 NO	C.T 용량	REMARK
		LOAD CURRENT	ADJ START TIME	SHOCK TIME	100%	110%				
0.5 TON	1.2KW x 8P	110%	1 SEC	1 SEC	4.6 A	5.1 A	CT-1	K, L	5 V.A	
	1.5KW x 6P	110%	1 SEC	1 SEC	5.5 A	6.1 A	CT-1	K, L	5 V.A	
	2.4KW x 4P	110%	1 SEC	1 SEC	5.6 A	6.2 A	CT-1	K, L	5 V.A	
1 TON	1.2KW x 8P	110%	1 SEC	1 SEC	4.6 A	5.1 A	CT-1	K, L	5 V.A	
	2.4KW x 4P	110%	1 SEC	1 SEC	5.6 A	6.2 A	CT-1	K, L	5 V.A	
2 TON	1.8KW x 8P	110%	1 SEC	1 SEC	6.4 A	7.0 A	CT-1	K, L	5 V.A	
	2.5KW x 6P	110%	1 SEC	1 SEC	7.0 A	7.7 A	CT-1	K, L	5 V.A	
	3.7KW x 4P	110%	1 SEC	1 SEC	9.3 A	10.2 A	CT-1	K, L	5 V.A	
2.8 TON	2.5KW x 8P	110%	1 SEC	1 SEC	10.3 A	11.3 A	CT-1	K, L	5 V.A	
	5.0KW x 4P	110%	1 SEC	1 SEC	12.2 A	13.4 A	CT-1	K, L	5 V.A	
3 TON	2.8KW x 8P	110%	1 SEC	1 SEC	10.3 A	11.3 A	CT-1	K, L	5 V.A	
	5.5KW x 4P	110%	1 SEC	1 SEC	12.2 A	13.4 A	CT-1	K, L	5 V.A	
5 TON	4.2KW x 8P	110%	1 SEC	1 SEC	13.3 A	14.6 A	CT-1	K, L	5 V.A	
	5.5KW x 6P	110%	1 SEC	1 SEC	16.3 A	17.9 A	CT-1	K, L	5 V.A	
	8.5KW x 4P	110%	1 SEC	1 SEC	19.9 A	21.9 A	CT-1	K, L	5 V.A	
7.5 TON	4.2KW x 8P	110%	1 SEC	1 SEC	13.3 A	14.6 A	CT-1	K, L	5 V.A	
	5.5KW x 6P	110%	1 SEC	1 SEC	19.9 A	21.9 A	CT-1	K, L	5 V.A	

NOTE

1. 상기 TABLE의 수치는 권고 SETTING 수치이며 MOTOR의 특성 및 현장 조건에 따라 변경 가능함.

192.168.11.51 / 2021-01-06 08:38:38

불법복제 및 배포금지

LOAD LIMITER 권고 SETTING치

* POWER SOURCE : AC 3Φ 440V 60Hz

극동호이스트㈜

HOIST	MOTOR 용량	LOAD LIMITER 권고 SETTING치			LOAD CURRENT		C.T MODEL	연결단자 NO	C.T 용량	REMARK
		LOAD CURRENT	ADJ START TIME	SHOCK TIME	100%	110%				
0.5 TON	1.2KW x 8P	110%	1 SEC	1 SEC	4.0 A	4.4 A	CT-1	K, L	5 V.A	
	1.5KW x 6P	110%	1 SEC	1 SEC	3.8 A	4.2 A	CT-1	K, L	5 V.A	
	2.4KW x 4P	110%	1 SEC	1 SEC	5.0 A	5.5 A	CT-1	K, L	5 V.A	
1 TON	1.2KW x 8P	110%	1 SEC	1 SEC	4.0 A	4.4 A	CT-1	K, L	5 V.A	
	2.4KW x 4P	110%	1 SEC	1 SEC	5.0 A	5.5 A	CT-1	K, L	5 V.A	
2 TON	1.8KW x 8P	110%	1 SEC	1 SEC	5.5 A	6.1 A	CT-1	K, L	5 V.A	
	2.5KW x 6P	110%	1 SEC	1 SEC	5.8 A	6.4 A	CT-1	K, L	5 V.A	
	3.7KW x 4P	110%	1 SEC	1 SEC	8.0 A	8.8 A	CT-1	K, L	5 V.A	
2.8 TON	2.5KW x 8P	110%	1 SEC	1 SEC	8.9 A	9.8 A	CT-1	K, L	5 V.A	
	5.0KW x 4P	110%	1 SEC	1 SEC	10.5 A	11.6 A	CT-1	K, L	5 V.A	
3 TON	2.8KW x 8P	110%	1 SEC	1 SEC	8.9 A	9.8 A	CT-1	K, L	5 V.A	
	5.5KW x 4P	110%	1 SEC	1 SEC	10.5 A	11.6 A	CT-1	K, L	5 V.A	
5 TON	4.2KW x 8P	110%	1 SEC	1 SEC	11.5 A	12.7 A	CT-1	K, L	5 V.A	
	5.5KW x 6P	110%	1 SEC	1 SEC	14.1 A	15.5 A	CT-1	K, L	5 V.A	
	8.5KW x 4P	110%	1 SEC	1 SEC	16.5 A	18.2 A	CT-1	K, L	5 V.A	
7.5 TON	4.2KW x 8P	110%	1 SEC	1 SEC	11.5 A	12.7 A	CT-1	K, L	5 V.A	
	5.5KW x 6P	110%	1 SEC	1 SEC	14.1 A	15.5 A	CT-1	K, L	5 V.A	

NOTE

1. 상기 TABLE의 수치는 권고 SETTING 수치이며 MOTOR의 특성 및 현장 조건에 따라 변경 가능함.

192.168.11.51 / 2021-01-06 08:38:38

불법복제 및 배포금지

LOAD LIMITER 권고 SETTING치

* POWER SOURCE : AC 3¢ 460V 60Hz

극동호이스트(주)

HOIST	MOTOR 용량	LOAD LIMITER 권고 SETTING치			LOAD CURRENT		C.T MODEL	연결단자 NO	C.T 용량	REMARK
		LOAD CURRENT	ADJ START TIME	SHOCK TIME	100%	110%				
0.5 TON	1.2KW x 8P	110%	1 SEC	1 SEC	3.8 A	4.2 A	CT-1	K, L	5 V.A	
	1.5KW x 6P	110%	1 SEC	1 SEC	3.6 A	4.0 A	CT-1	K, L	5 V.A	
	2.4KW x 4P	110%	1 SEC	1 SEC	4.8 A	5.3 A	CT-1	K, L	5 V.A	
1 TON	1.2KW x 8P	110%	1 SEC	1 SEC	3.8 A	4.2 A	CT-1	K, L	5 V.A	
	2.4KW x 4P	110%	1 SEC	1 SEC	4.8 A	5.3 A	CT-1	K, L	5 V.A	
2 TON	1.8KW x 8P	110%	1 SEC	1 SEC	5.3 A	5.8 A	CT-1	K, L	5 V.A	
	2.5KW x 6P	110%	1 SEC	1 SEC	5.5 A	6.1 A	CT-1	K, L	5 V.A	
	3.7KW x 4P	110%	1 SEC	1 SEC	7.7 A	8.5 A	CT-1	K, L	5 V.A	
2.8T	2.5KW x 8P	110%	1 SEC	1 SEC	7.7 A	8.5 A	CT-1	K, L	5 V.A	
	5.0KW x 4P	110%	1 SEC	1 SEC	10.0 A	11.0 A	CT-1	K, L	5 V.A	
3TON	2.8KW x 8P	110%	1 SEC	1 SEC	7.7 A	8.5 A	CT-1	K, L	5 V.A	
	5.5KW x 4P	110%	1 SEC	1 SEC	10.0 A	11.0 A	CT-1	K, L	5 V.A	
5 TON	4.2KW x 8P	110%	1 SEC	1 SEC	11.0 A	12.1 A	CT-1	K, L	5 V.A	
	5.5KW x 6P	110%	1 SEC	1 SEC	13.5 A	14.9 A	CT-1	K, L	5 V.A	
	8.5KW x 4P	110%	1 SEC	1 SEC	16.5 A	18.2 A	CT-1	K, L	5 V.A	
7.5 TON	4.2KW x 8P	110%	1 SEC	1 SEC	11.0 A	12.1 A	CT-1	K, L	5 V.A	
	5.5KW x 6P	110%	1 SEC	1 SEC	13.5 A	14.9 A	CT-1	K, L	5 V.A	

NOTE

1. 상기 TABLE의 수치는 권고 SETTING 수치이며 MOTOR의 특성 및 현장 조건에 따라 변경 가능함.

192.168.11.51 / 2021-01-06 08:38:38

불법복제 및 배포금지

LOAD LIMITER 권고 SETTING치

* POWER SOURCE : AC 3¢ 480V 60Hz

극동호이스트(주)

HOIST	MOTOR 용량	LOAD LIMITER 권고 SETTING치			LOAD CURRENT		C.T MODEL	연결단자 NO	C.T 용량	REMARK
		LOAD CURRENT	ADJ START TIME	SHOCK TIME	100%	110%				
0.5 TON	1.2KW x 8P	110%	1 SEC	1 SEC	3.6 A	4.0 A	CT-1	K, L	5 V.A	
	1.5KW x 6P	110%	1 SEC	1 SEC	3.5 A	3.9 A	CT-1	K, L	5 V.A	
	2.4KW x 4P	110%	1 SEC	1 SEC	4.6 A	5.1 A	CT-1	K, L	5 V.A	
1 TON	1.2KW x 8P	110%	1 SEC	1 SEC	3.6 A	4.0 A	CT-1	K, L	5 V.A	
	2.4KW x 4P	110%	1 SEC	1 SEC	4.6 A	5.1 A	CT-1	K, L	5 V.A	
2 TON	1.8KW x 8P	110%	1 SEC	1 SEC	5.1 A	5.6 A	CT-1	K, L	5 V.A	
	2.5KW x 6P	110%	1 SEC	1 SEC	5.3 A	5.8 A	CT-1	K, L	5 V.A	
	3.7KW x 4P	110%	1 SEC	1 SEC	7.3 A	8.0 A	CT-1	K, L	5 V.A	
2.8 TON	2.5KW x 8P	110%	1 SEC	1 SEC	7.3 A	8.0 A	CT-1	K, L	5 V.A	
	5.0KW x 4P	110%	1 SEC	1 SEC	9.6 A	10.6 A	CT-1	K, L	5 V.A	
3 TON	2.8KW x 8P	110%	1 SEC	1 SEC	7.3 A	8.0 A	CT-1	K, L	5 V.A	
	5.5KW x 4P	110%	1 SEC	1 SEC	9.6 A	10.6 A	CT-1	K, L	5 V.A	
5 TON	4.2KW x 8P	110%	1 SEC	1 SEC	10.5 A	11.6 A	CT-1	K, L	5 V.A	
	5.5KW x 6P	110%	1 SEC	1 SEC	12.9 A	14.2 A	CT-1	K, L	5 V.A	
	8.5KW x 4P	110%	1 SEC	1 SEC	15.8 A	17.4 A	CT-1	K, L	5 V.A	
7.5 TON	4.2KW x 8P	110%	1 SEC	1 SEC	10.5 A	11.6 A	CT-1	K, L	5 V.A	
	5.5KW x 6P	110%	1 SEC	1 SEC	12.9 A	14.2 A	CT-1	K, L	5 V.A	

NOTE

1. 상기 TABLE의 수치는 권고 SETTING 수치이며 MOTOR의 특성 및 현장 조건에 따라 변경 가능함.

192.168.11.51 / 2021-01-06 08:38:38

불법복제 및 배포금지

E.O.C.R 권고 SETTING 치

* POWER SOURCE : AC3₵ 220V 60Hz

극동호이스트 (주)

MOTOR 용량	MOTOR 정격 전류	DRIVE TYPE	E.O.C.R TYPE	권고 SETTING 치			REMARK
				DELAY TIME	OPERATION TIME	CURRENT	
0.2KW x 6P	2.1 A	1 DRIVE	SS - 05	3 SEC	1 SEC	2.3 A	
		2DRIVE	SS - 05	3 SEC	1 SEC	4.6 A	
0.4KW x 4P	2.7 A	1 DRIVE	SS - 05	3 SEC	1 SEC	3.0 A	
		2DRIVE	SS - 30	3 SEC	1 SEC	5.9 A	
0.5KW x 6P	3.4 A	1 DRIVE	SS - 05	3 SEC	1 SEC	3.7 A	
		2DRIVE	SS - 30	3 SEC	1 SEC	7.5 A	
0.75KW x 4P	4.1 A	1 DRIVE	SS - 05	3 SEC	1 SEC	4.5 A	
		2DRIVE	SS - 30	3 SEC	1 SEC	9.0 A	
1.0KW x 6P	6.7 A	1 DRIVE	SS - 30	3 SEC	1 SEC	7.4 A	
		2DRIVE	SS - 30	3 SEC	1 SEC	14.7 A	
1.5KW x 4P	7.3 A	1 DRIVE	SS - 30	3 SEC	1 SEC	8.0 A	
		2DRIVE	SS - 30	3 SEC	1 SEC	16.1 A	
1.5KW x 6P	7.6 A	1 DRIVE	SS - 30	3 SEC	1 SEC	8.4 A	
		2DRIVE	SS - 30	3 SEC	1 SEC	16.7 A	
2.2KW x 4P	10.0 A	1 DRIVE	SS - 30	3 SEC	1 SEC	11.0 A	
		2 DRIVE	SS - 30	3 SEC	1 SEC	22.0 A	
0.8/0.4KW x 4/8P	4.8 A	1 DRIVE	SS - 30	3 SEC	1 SEC	5.3 A	
			SS - 05	3 SEC	1 SEC	4.7 A	
	4.3 A	2 DRIVE	SS - 30	3 SEC	1 SEC	10.6 A	
			SS - 30	3 SEC	1 SEC	9.4 A	
2.2KW x 6P	12.0 A	1 DRIVE	SS - 30	3 SEC	1 SEC	13.2 A	
		2DRIVE	SS - 30	3 SEC	1 SEC	26.4 A	
3.7KW x 4P	16.0 A	1 DRIVE	SS - 30	3 SEC	1 SEC	17.6 A	
		2DRIVE	SS - 60	3 SEC	1 SEC	35.2 A	

NOTE

1, 상기 TABLE의 수치는 권고 SETTING 수치이며 MOTOR의 특성 및 현장 조건에 따라 변경 가능함.

불법복제 및 배포금지

192.168.11.51 / 2021-01-06 08:38:38

E.O.C.R 권고 SETTING 치

* POWER SOURCE : AC3¢ 380V 60Hz

극동호이스트 (주)

MOTOR 용량	MOTOR 정격 전류	DRIVE TYPE	E.O.C.R TYPE	권고 SETTING 치			REMARK
				DELAY TIME	OPERATION TIME	CURRENT	
0.2KW x 6P	1.6 A	1 DRIVE	SS - 05	3 SEC	1 SEC	1.8 A	
		2DRIVE	SS - 05	3 SEC	1 SEC	3.5 A	
0.4KW x 4P	1.8 A	1 DRIVE	SS - 05	3 SEC	1 SEC	2.0 A	
		2DRIVE	SS - 05	3 SEC	1 SEC	4.0 A	
0.5KW x 6P	2.0 A	1 DRIVE	SS - 05	3 SEC	1 SEC	2.2 A	
		2DRIVE	SS - 05	3 SEC	1 SEC	4.4 A	
0.75KW x 4P	2.4 A	1 DRIVE	SS - 05	3 SEC	1 SEC	2.6 A	
		2DRIVE	SS - 30	3 SEC	1 SEC	5.3 A	
1.0KW x 6P	3.9 A	1 DRIVE	SS - 05	3 SEC	1 SEC	4.3 A	
		2DRIVE	SS - 30	3 SEC	1 SEC	8.6 A	
1.5KW x 4P	4.2 A	1 DRIVE	SS - 05	3 SEC	1 SEC	4.6 A	
		2DRIVE	SS - 30	3 SEC	1 SEC	9.2 A	
1.5KW x 6P	4.4 A	1 DRIVE	SS - 05	3 SEC	1 SEC	4.8 A	
		2DRIVE	SS - 30	3 SEC	1 SEC	9.7 A	
2.2KW x 4P	5.8 A	1 DRIVE	SS - 30	3 SEC	1 SEC	6.4 A	
		2 DRIVE	SS - 30	3 SEC	1 SEC	12.8 A	
0.8/0.4KW x 4/8P	2.8 A	1 DRIVE	SS - 05	3 SEC	1 SEC	3.1 A	
			SS - 05	3 SEC	1 SEC	2.9 A	
	2.6 A	2 DRIVE	SS - 30	3 SEC	1 SEC	6.1 A	
			SS - 30	3 SEC	1 SEC	5.8 A	
2.2KW x 6P	7.0 A	1 DRIVE	SS - 30	3 SEC	1 SEC	7.7 A	
		2DRIVE	SS - 30	3 SEC	1 SEC	15.4 A	
3.7KW x 4P	9.3 A	1 DRIVE	SS - 30	3 SEC	1 SEC	10.2 A	
		2DRIVE	SS - 30	3 SEC	1 SEC	20.5 A	

NOTE

1, 상기 TABLE의 수치는 권고 SETTING 수치이며 MOTOR의 특성 및 현장 조건에 따라 변경 가능함.

불법복제 및 배포금지

192.168.11.51 / 2021-01-06 08:38:38

E.O.C.R 권고 SETTING 치

* POWER SOURCE : AC3¢ 440V 60Hz

극동호이스트 (주)

MOTOR 용량	MOTOR 정격 전류	DRIVE TYPE	E.O.C.R TYPE	권고 SETTING 치			REMARK
				DELAY TIME	OPERATION TIME	CURRENT	
0.2KW x 6P	1.2 A	1 DRIVE	SS - 05	3 SEC	1 SEC	1.3 A	
		2DRIVE	SS - 05	3 SEC	1 SEC	2.6 A	
0.4KW x 4P	1.4 A	1 DRIVE	SS - 05	3 SEC	1 SEC	1.5 A	
		2DRIVE	SS - 05	3 SEC	1 SEC	3.1 A	
0.5KW x 6P	1.7 A	1 DRIVE	SS - 05	3 SEC	1 SEC	1.9 A	
		2DRIVE	SS - 05	3 SEC	1 SEC	3.7 A	
0.75KW x 4P	2.0 A	1 DRIVE	SS - 05	3 SEC	1 SEC	2.2 A	
		2DRIVE	SS - 05	3 SEC	1 SEC	4.4 A	
1.0KW x 6P	3.3 A	1 DRIVE	SS - 05	3 SEC	1 SEC	3.6 A	
		2DRIVE	SS - 30	3 SEC	1 SEC	7.3 A	
1.5KW x 4P	3.7 A	1 DRIVE	SS - 05	3 SEC	1 SEC	4.1 A	
		2DRIVE	SS - 30	3 SEC	1 SEC	8.1 A	
1.5KW x 6P	3.8 A	1 DRIVE	SS - 05	3 SEC	1 SEC	4.2 A	
		2DRIVE	SS - 30	3 SEC	1 SEC	8.4 A	
2.2KW x 4P	5.0 A	1 DRIVE	SS - 30	3 SEC	1 SEC	5.5 A	
		2 DRIVE	SS - 30	3 SEC	1 SEC	11.0 A	
0.8/0.4KW x 4/8P	2.4 A	1 DRIVE	SS - 05	3 SEC	1 SEC	2.6 A	
			SS - 05	3 SEC	1 SEC	2.5 A	
	2.3 A	2 DRIVE	SS - 30	3 SEC	1 SEC	5.3 A	
			SS - 05	3 SEC	1 SEC	5.0 A	
2.2KW x 6P	5.8 A	1 DRIVE	SS - 30	3 SEC	1 SEC	6.4 A	
		2DRIVE	SS - 30	3 SEC	1 SEC	12.8 A	
3.7KW x 4P	8.0 A	1 DRIVE	SS - 30	3 SEC	1 SEC	8.8 A	
		2DRIVE	SS - 30	3 SEC	1 SEC	17.6 A	

NOTE

1, 상기 TABLE의 수치는 권고 SETTING 수치이며 MOTOR의 특성 및 현장 조건에 따라 변경 가능함.

불법복제 및 배포금지

192.168.11.51 / 2021-01-06 08:38:38

E.O.C.R 권고 SETTING 치

* POWER SOURCE : AC3₵ 460V 60Hz

극동호이스트 (주)

MOTOR 용량	MOTOR 정격 전류	DRIVE TYPE	E.O.C.R TYPE	권고 SETTING 치			REMARK
				DELAY TIME	OPERATION TIME	CURRENT	
0.2KW x 6P	1.2 A	1 DRIVE	SS - 05	3 SEC	1 SEC	1.3 A	
		2DRIVE	SS - 05	3 SEC	1 SEC	2.6 A	
0.4KW x 4P	1.4 A	1 DRIVE	SS - 05	3 SEC	1 SEC	1.5 A	
		2DRIVE	SS - 05	3 SEC	1 SEC	3.1 A	
0.5KW x 6P	1.7 A	1 DRIVE	SS - 05	3 SEC	1 SEC	1.9 A	
		2DRIVE	SS - 05	3 SEC	1 SEC	3.7 A	
0.75KW x 4P	2.0 A	1 DRIVE	SS - 05	3 SEC	1 SEC	2.2 A	
		2DRIVE	SS - 05	3 SEC	1 SEC	4.4 A	
1.0KW x 6P	3.2 A	1 DRIVE	SS - 05	3 SEC	1 SEC	3.5 A	
		2DRIVE	SS - 30	3 SEC	1 SEC	7.0 A	
1.5KW x 4P	3.5 A	1 DRIVE	SS - 05	3 SEC	1 SEC	3.9 A	
		2DRIVE	SS - 30	3 SEC	1 SEC	7.7 A	
1.5KW x 6P	3.8 A	1 DRIVE	SS - 05	3 SEC	1 SEC	4.2 A	
		2DRIVE	SS - 30	3 SEC	1 SEC	8.4 A	
2.2KW x 4P	5.0 A	1 DRIVE	SS - 30	3 SEC	1 SEC	5.5 A	
		2 DRIVE	SS - 30	3 SEC	1 SEC	11.0 A	
0.8/0.4KW x 4/8P	2.4 A	1 DRIVE	SS - 05	3 SEC	1 SEC	2.6 A	
			SS - 05	3 SEC	1 SEC	2.5 A	
	2.3 A	2 DRIVE	SS - 30	3 SEC	1 SEC	5.3 A	
			SS - 05	3 SEC	1 SEC	5.0 A	
2.2KW x 6P	5.8 A	1 DRIVE	SS - 30	3 SEC	1 SEC	6.4 A	
		2DRIVE	SS - 30	3 SEC	1 SEC	12.8 A	
3.7KW x 4P	8.0 A	1 DRIVE	SS - 30	3 SEC	1 SEC	8.8 A	
		2DRIVE	SS - 30	3 SEC	1 SEC	17.6 A	

NOTE

1, 상기 TABLE의 수치는 권고 SETTING 수치이며 MOTOR의 특성 및 현장 조건에 따라 변경 가능함.

E.O.C.R 권고 SETTING 치

불법복제 및 배포금지

192.168.11.51 / 2021-01-06 08:38:38

* POWER SOURCE : AC3¢ 480V 60Hz

극동호이스트 (주)

MOTOR 용량	MOTOR 정격 전류	DRIVE TYPE	E.O.C.R TYPE	권고 SETTING 치			REMARK
				DELAY TIME	OPERATION TIME	CURRENT	
0.2KW x 6P	1.2 A	1 DRIVE	SS - 05	3 SEC	1 SEC	1.3 A	
		2DRIVE	SS - 05	3 SEC	1 SEC	2.6 A	
0.4KW x 4P	1.4 A	1 DRIVE	SS - 05	3 SEC	1 SEC	1.5 A	
		2DRIVE	SS - 05	3 SEC	1 SEC	3.1 A	
0.5KW x 6P	1.6 A	1 DRIVE	SS - 05	3 SEC	1 SEC	1.8 A	
		2DRIVE	SS - 05	3 SEC	1 SEC	3.5 A	
0.75KW x 4P	1.9 A	1 DRIVE	SS - 05	3 SEC	1 SEC	2.1 A	
		2DRIVE	SS - 05	3 SEC	1 SEC	4.2 A	
1.0KW x 6P	3.1 A	1 DRIVE	SS - 05	3 SEC	1 SEC	3.4 A	
		2DRIVE	SS - 30	3 SEC	1 SEC	6.8 A	
1.5KW x 4P	3.4 A	1 DRIVE	SS - 05	3 SEC	1 SEC	3.7 A	
		2DRIVE	SS - 30	3 SEC	1 SEC	7.5 A	
1.5KW x 6P	3.8 A	1 DRIVE	SS - 05	3 SEC	1 SEC	4.2 A	
		2DRIVE	SS - 30	3 SEC	1 SEC	8.4 A	
2.2KW x 4P	5.0 A	1 DRIVE	SS - 30	3 SEC	1 SEC	5.5 A	
		2 DRIVE	SS - 30	3 SEC	1 SEC	11.0 A	
0.8/0.4KW x 4/8P	2.4 A	1 DRIVE	SS - 05	3 SEC	1 SEC	2.6 A	
			SS - 05	3 SEC	1 SEC	2.5 A	
	2.3 A	2 DRIVE	SS - 30	3 SEC	1 SEC	5.3 A	
			SS - 05	3 SEC	1 SEC	5.0 A	
2.2KW x 6P	5.8 A	1 DRIVE	SS - 30	3 SEC	1 SEC	6.4 A	
		2DRIVE	SS - 30	3 SEC	1 SEC	12.8 A	
3.7KW x 4P	8.0 A	1 DRIVE	SS - 30	3 SEC	1 SEC	8.8 A	
		2DRIVE	SS - 30	3 SEC	1 SEC	17.6 A	

NOTE

1, 상기 TABLE의 수치는 권고 SETTING 수치이며 MOTOR의 특성 및 현장 조건에 따라 변경 가능함.

불법복제 및 배포금지

192.168.11.51 / 2021-01-06 08:38:38

불법복제 및 배포금지

THREE PHASE INDUCTION MOTOR DATA SHEET

SCHEDULE OF TECHNICAL DATA

1. SERVICE	HOISTING
2. MANUFACTURE	극동 호이스트(주)
3. FRAME NUMBER	132 M
4. RATED POWER	5.5 KW x 6 P
5. RATED VOLTAGE AND FREQUENCY	220 V 60 Hz
6. MOTOR TYPE	SQUIRREL CAGE ROTOR TYPE
7. SERVICE FACTOR AND RATTING	1 . 0 , 30 MIN
8. LOCATION AND INSULATION CLASS	INDOOR, OUTDOOR, B CLASS
9. DESIGN TEMPERATURE RISE(BY RESISTANCE)	80 ℃
10. FULL LOAD SPEED	1140 RPM
11. FULL LOAD CURRENT	28.2 A
12. LOCKED ROTOR CURRENT	155.1 A
13. MINIMUM STARTING VOLTAGE	198 V
14. EFFICIENCY AT 100% RATED LOAD	77.0 %
15. POWER FACTOR AT 100% RATED LOAD	66.4 %
16. FULL LOAD TORQUE	11.59 KG.M
17. SITE ALTITUDE(UNDER)	1000 M
18. ENCLOSURE & COOLING METHOD	T E N V
19. TYPE OF BEARING	PL : 6307zz OPL : 6207zz
20. MOUNTING	H O R I Z O N T A L
21. MAXIMUM AMBIENT TEMPERATURE	40 ℃
22. BEARING LUBRICATION	G R E A S E
23. STARTING METHOD	F U L L V O L T A G E

192.168.11.51 / 2021-01-06 08:38:38

불법복제 및 배포금지

THREE PHASE INDUCTION MOTOR DATA SHEET

SCHEDULE OF TECHNICAL DATA

1. SERVICE	HOISTING
2. MANUFACTURE	극동 호이스트(주)
3. FRAME NUMBER	132 M
4. RATED POWER	5.5 KW x 6 P
5. RATED VOLTAGE AND FREQUENCY	380 V 60 Hz
6. MOTOR TYPE	SQUIRREL CAGE ROTOR TYPE
7. SERVICE FACTOR AND RATTING	1 . 0 , 30 MIN
8. LOCATION AND INSULATION CLASS	INDOOR, OUTDOOR, B CLASS
9. DESIGN TEMPERATURE RISE(BY RESISTANCE)	80 ℃
10. FULL LOAD SPEED	1140 RPM
11. FULL LOAD CURRENT	16.3 A
12. LOCKED ROTOR CURRENT	89.8 A
13. MINIMUM STARTING VOLTAGE	342 V
14. EFFICIENCY AT 100% RATED LOAD	77.0 %
15. POWER FACTOR AT 100% RATED LOAD	66.4 %
16. FULL LOAD TORQUE	11.59 KG.M
17. SITE ALTITUDE(UNDER)	1000 M
18. ENCLOSURE & COOLING METHOD	T E N V
19. TYPE OF BEARING	PL : 6307zz OPL : 6207zz
20. MOUNTING	H O R I Z O N T A L
21. MAXIMUM AMBIENT TEMPERATURE	40 ℃
22. BEARING LUBRICATION	G R E A S E
23. STARTING METHOD	F U L L V O L T A G E

192.168.11.51 / 2021-01-06 08:38:38

불법복제 및 배포금지

THREE PHASE INDUCTION MOTOR DATA SHEET

SCHEDULE OF TECHNICAL DATA

1. SERVICE	HOISTING
2. MANUFACTURE	극동 호이스트(주)
3. FRAME NUMBER	132 M
4. RATED POWER	5.5 KW x 6 P
5. RATED VOLTAGE AND FREQUENCY	440 V 60 Hz
6. MOTOR TYPE	SQUIRREL CAGE ROTOR TYPE
7. SERVICE FACTOR AND RATTING	1 . 0 , 30 MIN
8. LOCATION AND INSULATION CLASS	INDOOR, OUTDOOR, B CLASS
9. DESIGN TEMPERATURE RISE(BY RESISTANCE)	80 ℃
10. FULL LOAD SPEED	1140 RPM
11. FULL LOAD CURRENT	14.1 A
12. LOCKED ROTOR CURRENT	77.6 A
13. MINIMUM STARTING VOLTAGE	396 V
14. EFFICIENCY AT 100% RATED LOAD	77.0 %
15. POWER FACTOR AT 100% RATED LOAD	66.4 %
16. FULL LOAD TORQUE	11.59 KG.M
17. SITE ALTITUDE(UNDER)	1000 M
18. ENCLOSURE & COOLING METHOD	T E N V
19. TYPE OF BEARING	PL : 6307zz OPL : 6207zz
20. MOUNTING	H O R I Z O N T A L
21. MAXIMUM AMBIENT TEMPERATURE	40 ℃
22. BEARING LUBRICATION	G R E A S E
23. STARTING METHOD	F U L L V O L T A G E

192.168.11.51 / 2021-01-06 08:38:38

불법복제 및 배포금지

THREE PHASE INDUCTION MOTOR DATA SHEET

SCHEDULE OF TECHNICAL DATA

1. SERVICE	HOISTING
2. MANUFACTURE	극동 호이스트(주)
3. FRAME NUMBER	132 M
4. RATED POWER	5.5 KW x 6 P
5. RATED VOLTAGE AND FREQUENCY	460 V 60 Hz
6. MOTOR TYPE	SQUIRREL CAGE ROTOR TYPE
7. SERVICE FACTOR AND RATTING	1 . 0 , 30 MIN
8. LOCATION AND INSULATION CLASS	INDOOR, OUTDOOR, B CLASS
9. DESIGN TEMPERATURE RISE(BY RESISTANCE)	80 ℃
10. FULL LOAD SPEED	1140 RPM
11. FULL LOAD CURRENT	13.5 A
12. LOCKED ROTOR CURRENT	74.3 A
13. MINIMUM STARTING VOLTAGE	414 V
14. EFFICIENCY AT 100% RATED LOAD	77.0 %
15. POWER FACTOR AT 100% RATED LOAD	66.4 %
16. FULL LOAD TORQUE	11.59 KG.M
17. SITE ALTITUDE(UNDER)	1000 M
18. ENCLOSURE & COOLING METHOD	T E N V
19. TYPE OF BEARING	PL : 6307zz OPL : 6207zz
20. MOUNTING	H O R I Z O N T A L
21. MAXIMUM AMBIENT TEMPERATURE	40 ℃
22. BEARING LUBRICATION	G R E A S E
23. STARTING METHOD	F U L L V O L T A G E

192.168.11.51 / 2021-01-06 08:38:38

불법복제 및 배포금지

THREE PHASE INDUCTION MOTOR DATA SHEET

SCHEDULE OF TECHNICAL DATA

1. SERVICE	HOISTING
2. MANUFACTURE	극동 호이스트(주)
3. FRAME NUMBER	132 M
4. RATED POWER	5.5 KW x 6 P
5. RATED VOLTAGE AND FREQUENCY	480 V 60 Hz
6. MOTOR TYPE	SQUIRREL CAGE ROTOR TYPE
7. SERVICE FACTOR AND RATTING	1 . 0 , 30 MIN
8. LOCATION AND INSULATION CLASS	INDOOR, OUTDOOR, B CLASS
9. DESIGN TEMPERATURE RISE(BY RESISTANCE)	80 ℃
10. FULL LOAD SPEED	1140 RPM
11. FULL LOAD CURRENT	12.9 A
12. LOCKED ROTOR CURRENT	71.2 A
13. MINIMUM STARTING VOLTAGE	432 V
14. EFFICIENCY AT 100% RATED LOAD	77.0 %
15. POWER FACTOR AT 100% RATED LOAD	66.4 %
16. FULL LOAD TORQUE	11.59 KG.M
17. SITE ALTITUDE(UNDER)	1000 M
18. ENCLOSURE & COOLING METHOD	T E N V
19. TYPE OF BEARING	PL : 6307zz OPL : 6207zz
20. MOUNTING	H O R I Z O N T A L
21. MAXIMUM AMBIENT TEMPERATURE	40 ℃
22. BEARING LUBRICATION	G R E A S E
23. STARTING METHOD	F U L L V O L T A G E

192.168.11.51 / 2021-01-06 08:38:38

불법복제 및 배포금지

THREE PHASE INDUCTION MOTOR DATA SHEET

SCHEDULE OF TECHNICAL DATA

1. SERVICE	HOISTING
2. MANUFACTURE	극동 호이스트(주)
3. FRAME NUMBER	132 M
4. RATED POWER	4.2 KW x 8 P
5. RATED VOLTAGE AND FREQUENCY	220 V 60 Hz
6. MOTOR TYPE	SQUIRREL CAGE ROTOR TYPE
7. SERVICE FACTOR AND RATTING	1 . 0 , 30 MIN
8. LOCATION AND INSULATION CLASS	INDOOR, OUTDOOR, B CLASS
9. DESIGN TEMPERATURE RISE(BY RESISTANCE)	80 ℃
10. FULL LOAD SPEED	864 RPM
11. FULL LOAD CURRENT	23.0 A
12. LOCKED ROTOR CURRENT	136.2 A
13. MINIMUM STARTING VOLTAGE	198 V
14. EFFICIENCY AT 100% RATED LOAD	77.5 %
15. POWER FACTOR AT 100% RATED LOAD	60.0 %
16. FULL ROTOR TORQUE	14.93 KG.M
17. SITE ALTITUDE(UNDER)	1000 M
18. ENCLOSURE & COOLING METHOD	T E N V
19. TYPE OF BEARING	PL : 6307zz OPL : 6207zz
20. MOUNTING	H O R I Z O N T A L
21. MAXIMUM AMBIENT TEMPERATURE	40 ℃
22. BEARING LUBRICATION	G R E A S E
23. STARTING METHOD	F U L L V O L T A G E

192.168.11.51 / 2021-01-06 08:38:38

불법복제 및 배포금지

THREE PHASE INDUCTION MOTOR DATA SHEET

SCHEDULE OF TECHNICAL DATA

1. SERVICE	HOISTING
2. MANUFACTURE	극동 호이스트(주)
3. FRAME NUMBER	132 M
4. RATED POWER	4.2 KW x 8 P
5. RATED VOLTAGE AND FREQUENCY	380 V 60 Hz
6. MOTOR TYPE	SQUIRREL CAGE ROTOR TYPE
7. SERVICE FACTOR AND RATTING	1 . 0 , 30 MIN
8. LOCATION AND INSULATION CLASS	INDOOR, OUTDOOR, B CLASS
9. DESIGN TEMPERATURE RISE(BY RESISTANCE)	80 ℃
10. FULL LOAD SPEED	864 RPM
11. FULL LOAD CURRENT	13.3 A
12. LOCKED ROTOR CURRENT	78.8 A
13. MINIMUM STARTING VOLTAGE	342 V
14. EFFICIENCY AT 100% RATED LOAD	77.5 %
15. POWER FACTOR AT 100% RATED LOAD	60.0 %
16. FULL ROTOR TORQUE	14.93 KG.M
17. SITE ALTITUDE(UNDER)	1000 M
18. ENCLOSURE & COOLING METHOD	T E N V
19. TYPE OF BEARING	PL : 6307zz OPL : 6207zz
20. MOUNTING	H O R I Z O N T A L
21. MAXIMUM AMBIENT TEMPERATURE	40 ℃
22. BEARING LUBRICATION	G R E A S E
23. STARTING METHOD	F U L L V O L T A G E

192.168.11.51 / 2021-01-06 08:38:38

불법복제 및 배포금지

THREE PHASE INDUCTION MOTOR DATA SHEET

SCHEDULE OF TECHNICAL DATA

1. SERVICE	HOISTING
2. MANUFACTURE	극동 호이스트(주)
3. FRAME NUMBER	132 M
4. RATED POWER	4.2 KW x 8 P
5. RATED VOLTAGE AND FREQUENCY	440 V 60 Hz
6. MOTOR TYPE	SQUIRREL CAGE ROTOR TYPE
7. SERVICE FACTOR AND RATTING	1 . 0 , 30 MIN
8. LOCATION AND INSULATION CLASS	INDOOR, OUTDOOR, B CLASS
9. DESIGN TEMPERATURE RISE(BY RESISTANCE)	80 ℃
10. FULL LOAD SPEED	864 RPM
11. FULL LOAD CURRENT	11.5 A
12. LOCKED ROTOR CURRENT	68.1 A
13. MINIMUM STARTING VOLTAGE	396 V
14. EFFICIENCY AT 100% RATED LOAD	77.5 %
15. POWER FACTOR AT 100% RATED LOAD	60.0 %
16. FULL ROTOR TORQUE	14.93 KG.M
17. SITE ALTITUDE(UNDER)	1000 M
18. ENCLOSURE & COOLING METHOD	T E N V
19. TYPE OF BEARING	PL : 6307zz OPL : 6207zz
20. MOUNTING	H O R I Z O N T A L
21. MAXIMUM AMBIENT TEMPERATURE	40 ℃
22. BEARING LUBRICATION	G R E A S E
23. STARTING METHOD	F U L L V O L T A G E

192.168.11.51 / 2021-01-06 08:38:38

불법복제 및 배포금지

THREE PHASE INDUCTION MOTOR DATA SHEET

SCHEDULE OF TECHNICAL DATA

1. SERVICE	HOISTING
2. MANUFACTURE	극동 호이스트(주)
3. FRAME NUMBER	132 M
4. RATED POWER	4.2 KW x 8 P
5. RATED VOLTAGE AND FREQUENCY	460 V 60 Hz
6. MOTOR TYPE	SQUIRREL CAGE ROTOR TYPE
7. SERVICE FACTOR AND RATTING	1 . 0 , 30 MIN
8. LOCATION AND INSULATION CLASS	INDOOR, OUTDOOR, B CLASS
9. DESIGN TEMPERATURE RISE(BY RESISTANCE)	80 ℃
10. FULL LOAD SPEED	864 RPM
11. FULL LOAD CURRENT	11.0 A
12. LOCKED ROTOR CURRENT	65.1 A
13. MINIMUM STARTING VOLTAGE	414 V
14. EFFICIENCY AT 100% RATED LOAD	77.5 %
15. POWER FACTOR AT 100% RATED LOAD	60.0 %
16. FULL ROTOR TORQUE	14.93 KG.M
17. SITE ALTITUDE(UNDER)	1000 M
18. ENCLOSURE & COOLING METHOD	T E N V
19. TYPE OF BEARING	PL : 6307zz OPL : 6207zz
20. MOUNTING	H O R I Z O N T A L
21. MAXIMUM AMBIENT TEMPERATURE	40 ℃
22. BEARING LUBRICATION	G R E A S E
23. STARTING METHOD	F U L L V O L T A G E

192.168.11.51 / 2021-01-06 08:38:38

불법복제 및 배포금지

THREE PHASE INDUCTION MOTOR DATA SHEET

SCHEDULE OF TECHNICAL DATA

1. SERVICE	HOISTING
2. MANUFACTURE	극동 호이스트(주)
3. FRAME NUMBER	132 M
4. RATED POWER	4.2 KW x 8 P
5. RATED VOLTAGE AND FREQUENCY	480 V 60 Hz
6. MOTOR TYPE	SQUIRREL CAGE ROTOR TYPE
7. SERVICE FACTOR AND RATTING	1 . 0 , 30 MIN
8. LOCATION AND INSULATION CLASS	INDOOR, OUTDOOR, B CLASS
9. DESIGN TEMPERATURE RISE(BY RESISTANCE)	80 ℃
10. FULL LOAD SPEED	864 RPM
11. FULL LOAD CURRENT	10.5 A
12. LOCKED ROTOR CURRENT	62.4 A
13. MINIMUM STARTING VOLTAGE	432 V
14. EFFICIENCY AT 100% RATED LOAD	77.5 %
15. POWER FACTOR AT 100% RATED LOAD	60.0 %
16. FULL ROTOR TORQUE	14.93 KG.M
17. SITE ALTITUDE(UNDER)	1000 M
18. ENCLOSURE & COOLING METHOD	T E N V
19. TYPE OF BEARING	PL : 6307zz OPL : 6207zz
20. MOUNTING	H O R I Z O N T A L
21. MAXIMUM AMBIENT TEMPERATURE	40 ℃
22. BEARING LUBRICATION	G R E A S E
23. STARTING METHOD	F U L L V O L T A G E

192.168.11.51 / 2021-01-06 08:38:38

불법복제 및 배포금지

THREE PHASE INDUCTION MOTOR DATA SHEET

SCHEDULE OF TECHNICAL DATA

1. SERVICE	TRAVERSING
2. MANUFACTURE	극동호이스트 (주)
3. FRAME NUMBER	90 L
4. RATED POWER	1.5 KW x 4 P
5. RATED VOLTAGE AND FREQUENCY	220 V 60 Hz
6. MOTOR TYPE	SQUIRREL CAGE ROTOR TYPE
7. SERVICE FACTOR AND RATTING	1 . 0 , 30 MIN
8. LOCATION AND INSULATION CLASS	INDOOR, OUTDOOR, B CLASS
9. DESIGN TEMPERATURE RISE(BY RESISTANCE)	80 ℃
10. FULL LOAD SPEED	1710 RPM
11. FULL LOAD CURRENT	7.3 A
12. STARTING CURRENT AT RATED VOLTAGE	42.0 A
13. MINIMUM STARTING VOLTAGE	198 V
14. EFFICIENCY AT 100% RATED LOAD	73.0 %
15. POWER FACTOR AT 100% RATED LOAD	75.0 %
16. STARTING TORQUE	1.72 KG.M
17. SITE ALTITUDE(UNDER)	1000 M
18. ENCLOSURE & COOLING METHOD	T E N V
19. TYPE OF BEARING	PL : 6205zz OPL : 6204zz
20. MOUNTING	H O R I Z O N T A L
21. MAXIMUM AMBIENT TEMPERATURE	40 ℃
22. BEARING LUBRICATION	G R E A S E
23. STARTING METHOD	F U L L V O L T A G E

192.168.11.51 / 2021-01-06 08:38:38

불법복제 및 배포금지

THREE PHASE INDUCTION MOTOR DATA SHEET

SCHEDULE OF TECHNICAL DATA

1. SERVICE	TRAVERSING
2. MANUFACTURE	극동호이스트 (주)
3. FRAME NUMBER	90 L
4. RATED POWER	1.5 KW x 4 P
5. RATED VOLTAGE AND FREQUENCY	380 V 60 Hz
6. MOTOR TYPE	SQUIRREL CAGE ROTOR TYPE
7. SERVICE FACTOR AND RATTING	1 . 0 , 30 MIN
8. LOCATION AND INSULATION CLASS	INDOOR, OUTDOOR, B CLASS
9. DESIGN TEMPERATURE RISE(BY RESISTANCE)	80 ℃
10. FULL LOAD SPEED	1710 RPM
11. FULL LOAD CURRENT	4.2 A
12. STARTING CURRENT AT RATED VOLTAGE	24.2 A
13. MINIMUM STARTING VOLTAGE	342 V
14. EFFICIENCY AT 100% RATED LOAD	73.0 %
15. POWER FACTOR AT 100% RATED LOAD	75.0 %
16. STARTING TORQUE	1.72 KG.M
17. SITE ALTITUDE(UNDER)	1000 M
18. ENCLOSURE & COOLING METHOD	T E N V
19. TYPE OF BEARING	PL : 6205zz OPL : 6204zz
20. MOUNTING	H O R I Z O N T A L
21. MAXIMUM AMBIENT TEMPERATURE	40 ℃
22. BEARING LUBRICATION	G R E A S E
23. STARTING METHOD	F U L L V O L T A G E

192.168.11.51 / 2021-01-06 08:38:38

불법복제 및 배포금지

THREE PHASE INDUCTION MOTOR DATA SHEET

SCHEDULE OF TECHNICAL DATA

1. SERVICE	TRAVERSING
2. MANUFACTURE	극동호이스트 (주)
3. FRAME NUMBER	90 L
4. RATED POWER	1.5 KW x 4 P
5. RATED VOLTAGE AND FREQUENCY	440 V 60 Hz
6. MOTOR TYPE	SQUIRREL CAGE ROTOR TYPE
7. SERVICE FACTOR AND RATTING	1 . 0 , 30 MIN
8. LOCATION AND INSULATION CLASS	INDOOR, OUTDOOR, B CLASS
9. DESIGN TEMPERATURE RISE(BY RESISTANCE)	80 ℃
10. FULL LOAD SPEED	1710 RPM
11. FULL LOAD CURRENT	3.7A
12. STARTING CURRENT AT RATED VOLTAGE	21.0 A
13. MINIMUM STARTING VOLTAGE	396 V
14. EFFICIENCY AT 100% RATED LOAD	73.0 %
15. POWER FACTOR AT 100% RATED LOAD	75.0 %
16. STARTING TORQUE	1.72 KG.M
17. SITE ALTITUDE(UNDER)	1000 M
18. ENCLOSURE & COOLING METHOD	T E N V
19. TYPE OF BEARING	PL : 6205zz OPL : 6204zz
20. MOUNTING	H O R I Z O N T A L
21. MAXIMUM AMBIENT TEMPERATURE	40 ℃
22. BEARING LUBRICATION	G R E A S E
23. STARTING METHOD	F U L L V O L T A G E

192.168.11.51 / 2021-01-06 08:38:38

불법복제 및 배포금지

THREE PHASE INDUCTION MOTOR DATA SHEET

SCHEDULE OF TECHNICAL DATA

1. SERVICE	TRAVERSING
2. MANUFACTURE	극동호이스트 (주)
3. FRAME NUMBER	90 L
4. RATED POWER	1.5 KW x 4 P
5. RATED VOLTAGE AND FREQUENCY	460 V 60 Hz
6. MOTOR TYPE	SQUIRREL CAGE ROTOR TYPE
7. SERVICE FACTOR AND RATTING	1 . 0 , 30 MIN
8. LOCATION AND INSULATION CLASS	INDOOR, OUTDOOR, B CLASS
9. DESIGN TEMPERATURE RISE(BY RESISTANCE)	80 ℃
10. FULL LOAD SPEED	1710 RPM
11. FULL LOAD CURRENT	3.5A
12. STARTING CURRENT AT RATED VOLTAGE	20.8 A
13. MINIMUM STARTING VOLTAGE	414 V
14. EFFICIENCY AT 100% RATED LOAD	73.0 %
15. POWER FACTOR AT 100% RATED LOAD	75.0 %
16. STARTING TORQUE	1.72 KG.M
17. SITE ALTITUDE(UNDER)	1000 M
18. ENCLOSURE & COOLING METHOD	T E N V
19. TYPE OF BEARING	PL : 6205zz OPL : 6204zz
20. MOUNTING	H O R I Z O N T A L
21. MAXIMUM AMBIENT TEMPERATURE	40 ℃
22. BEARING LUBRICATION	G R E A S E
23. STARTING METHOD	F U L L V O L T A G E

192.168.11.51 / 2021-01-06 08:38:38

불법복제 및 배포금지

THREE PHASE INDUCTION MOTOR DATA SHEET

SCHEDULE OF TECHNICAL DATA

1. SERVICE	TRAVERSING
2. MANUFACTURE	극동호이스트 (주)
3. FRAME NUMBER	90 L
4. RATED POWER	1.5 KW x 4 P
5. RATED VOLTAGE AND FREQUENCY	480 V 60 Hz
6. MOTOR TYPE	SQUIRREL CAGE ROTOR TYPE
7. SERVICE FACTOR AND RATTING	1 . 0 , 30 MIN
8. LOCATION AND INSULATION CLASS	INDOOR, OUTDOOR, B CLASS
9. DESIGN TEMPERATURE RISE(BY RESISTANCE)	80 ℃
10. FULL LOAD SPEED	1710 RPM
11. FULL LOAD CURRENT	3.4A
12. STARTING CURRENT AT RATED VOLTAGE	20.0 A
13. MINIMUM STARTING VOLTAGE	432 V
14. EFFICIENCY AT 100% RATED LOAD	73.0 %
15. POWER FACTOR AT 100% RATED LOAD	75.0 %
16. STARTING TORQUE	1.72 KG.M
17. SITE ALTITUDE(UNDER)	1000 M
18. ENCLOSURE & COOLING METHOD	T E N V
19. TYPE OF BEARING	PL : 6205zz OPL : 6204zz
20. MOUNTING	H O R I Z O N T A L
21. MAXIMUM AMBIENT TEMPERATURE	40 ℃
22. BEARING LUBRICATION	G R E A S E
23. STARTING METHOD	F U L L V O L T A G E

192.168.11.51 / 2021-01-06 08:38:38

불법복제 및 배포금지

THREE PHASE INDUCTION MOTOR DATA SHEET

SCHEDULE OF TECHNICAL DATA

1. SERVICE	TRAVERSING
2. MANUFACTURE	극동 호이스트 (주)
3. FRAME NUMBER	80 S
4. RATED POWER	1.0 KW x 6 P
5. RATED VOLTAGE AND FREQUENCY	220 V 60 Hz
6. MOTOR TYPE	SQUIRREL CAGE ROTOR TYPE
7. SERVICE FACTOR AND RATTING	1 . 0 , 30 MIN
8. LOCATION AND INSULATION CLASS	INDOOR, OUTDOOR, B CLASS
9. DESIGN TEMPERATURE RISE(BY RESISTANCE)	80 ℃
10. FULL LOAD SPEED	1140 RPM
11. FULL LOAD CURRENT	6.7 A
12. LOCKED ROTOR CURRENT	23.8 A
13. MINIMUM STARTING VOLTAGE	198 V
14. EFFICIENCY AT 100% RATED LOAD	63.5 %
15. POWER FACTOR AT 100% RATED LOAD	62.0 %
16. STARTING TORQUE	1.1 KG.M
17. SITE ALTITUDE(UNDER)	1000 M
18. ENCLOSURE & COOLING METHOD	T E N V
19. TYPE OF BEARING	PL : 6207zz OPL : 6204zz
20. MOUNTING	H O R I Z O N T A L
21. MAXIMUM AMBIENT TEMPERATURE	40 ℃
22. BEARING LUBRICATION	G R E A S E
23. STARTING METHOD	F U L L V O L T A G E

192.168.11.51 / 2021-01-06 08:38:38

불법복제 및 배포금지

THREE PHASE INDUCTION MOTOR DATA SHEET

SCHEDULE OF TECHNICAL DATA

1. SERVICE	TRAVERSING
2. MANUFACTURE	극동 호이스트 (주)
3. FRAME NUMBER	80 S
4. RATED POWER	1.0 KW x 6 P
5. RATED VOLTAGE AND FREQUENCY	380 V 60 Hz
6. MOTOR TYPE	SQUIRREL CAGE ROTOR TYPE
7. SERVICE FACTOR AND RATTING	1 . 0 , 30 MIN
8. LOCATION AND INSULATION CLASS	INDOOR, OUTDOOR, B CLASS
9. DESIGN TEMPERATURE RISE(BY RESISTANCE)	80 ℃
10. FULL LOAD SPEED	1140 RPM
11. FULL LOAD CURRENT	3.85 A
12. LOCKED ROTOR CURRENT	13.78 A
13. MINIMUM STARTING VOLTAGE	342 V
14. EFFICIENCY AT 100% RATED LOAD	63.5 %
15. POWER FACTOR AT 100% RATED LOAD	62.0 %
16. STARTING TORQUE	1.1 KG.M
17. SITE ALTITUDE(UNDER)	1000 M
18. ENCLOSURE & COOLING METHOD	T E N V
19. TYPE OF BEARING	PL : 6207zz OPL : 6204zz
20. MOUNTING	H O R I Z O N T A L
21. MAXIMUM AMBIENT TEMPERATURE	40 ℃
22. BEARING LUBRICATION	G R E A S E
23. STARTING METHOD	F U L L V O L T A G E

192.168.11.51 / 2021-01-06 08:38:38

불법복제 및 배포금지

THREE PHASE INDUCTION MOTOR DATA SHEET

SCHEDULE OF TECHNICAL DATA

1. SERVICE	TRAVERSING
2. MANUFACTURE	극동 호이스트 (주)
3. FRAME NUMBER	80 S
4. RATED POWER	1.0 KW x 6 P
5. RATED VOLTAGE AND FREQUENCY	440 V 60 Hz
6. MOTOR TYPE	SQUIRREL CAGE ROTOR TYPE
7. SERVICE FACTOR AND RATTING	1 . 0 , 30 MIN
8. LOCATION AND INSULATION CLASS	INDOOR, OUTDOOR, B CLASS
9. DESIGN TEMPERATURE RISE(BY RESISTANCE)	80 ℃
10. FULL LOAD SPEED	1140 RPM
11. FULL LOAD CURRENT	3.33 A
12. LOCKED ROTOR CURRENT	11.9 A
13. MINIMUM STARTING VOLTAGE	396 V
14. EFFICIENCY AT 100% RATED LOAD	63.5 %
15. POWER FACTOR AT 100% RATED LOAD	62.0 %
16. STARTING TORQUE	1.1 KG.M
17. SITE ALTITUDE(UNDER)	1000 M
18. ENCLOSURE & COOLING METHOD	T E N V
19. TYPE OF BEARING	PL : 6207zz OPL : 6204zz
20. MOUNTING	H O R I Z O N T A L
21. MAXIMUM AMBIENT TEMPERATURE	40 ℃
22. BEARING LUBRICATION	G R E A S E
23. STARTING METHOD	F U L L V O L T A G E

192.168.11.51 / 2021-01-06 08:38:38

불법복제 및 배포금지

THREE PHASE INDUCTION MOTOR DATA SHEET

SCHEDULE OF TECHNICAL DATA

1. SERVICE	TRAVERSING
2. MANUFACTURE	극동 호이스트 (주)
3. FRAME NUMBER	80 S
4. RATED POWER	1.0 KW x 6 P
5. RATED VOLTAGE AND FREQUENCY	460 V 60 Hz
6. MOTOR TYPE	SQUIRREL CAGE ROTOR TYPE
7. SERVICE FACTOR AND RATTING	1 . 0 , 30 MIN
8. LOCATION AND INSULATION CLASS	INDOOR, OUTDOOR, B CLASS
9. DESIGN TEMPERATURE RISE(BY RESISTANCE)	80 ℃
10. FULL LOAD SPEED	1140 RPM
11. FULL LOAD CURRENT	3.2 A
12. LOCKED ROTOR CURRENT	11.37 A
13. MINIMUM STARTING VOLTAGE	414 V
14. EFFICIENCY AT 100% RATED LOAD	63.5 %
15. POWER FACTOR AT 100% RATED LOAD	62.0 %
16. STARTING TORQUE	1.1 KG.M
17. SITE ALTITUDE(UNDER)	1000 M
18. ENCLOSURE & COOLING METHOD	T E N V
19. TYPE OF BEARING	PL : 6207zz OPL : 6204zz
20. MOUNTING	H O R I Z O N T A L
21. MAXIMUM AMBIENT TEMPERATURE	40 ℃
22. BEARING LUBRICATION	G R E A S E
23. STARTING METHOD	F U L L V O L T A G E

192.168.11.51 / 2021-01-06 08:38:38

불법복제 및 배포금지

THREE PHASE INDUCTION MOTOR DATA SHEET

SCHEDULE OF TECHNICAL DATA

1. SERVICE	TRAVERSING
2. MANUFACTURE	극동 호이스트 (주)
3. FRAME NUMBER	80 S
4. RATED POWER	1.0 KW x 6 P
5. RATED VOLTAGE AND FREQUENCY	480 V 60 Hz
6. MOTOR TYPE	SQUIRREL CAGE ROTOR TYPE
7. SERVICE FACTOR AND RATTING	1 . 0 , 30 MIN
8. LOCATION AND INSULATION CLASS	INDOOR, OUTDOOR, B CLASS
9. DESIGN TEMPERATURE RISE(BY RESISTANCE)	80 ℃
10. FULL LOAD SPEED	1140 RPM
11. FULL LOAD CURRENT	3.05 A
12. LOCKED ROTOR CURRENT	10.9 A
13. MINIMUM STARTING VOLTAGE	432 V
14. EFFICIENCY AT 100% RATED LOAD	63.5 %
15. POWER FACTOR AT 100% RATED LOAD	62.0 %
16. STARTING TORQUE	1.1 KG.M
17. SITE ALTITUDE(UNDER)	1000 M
18. ENCLOSURE & COOLING METHOD	T E N V
19. TYPE OF BEARING	PL : 6207zz OPL : 6204zz
20. MOUNTING	H O R I Z O N T A L
21. MAXIMUM AMBIENT TEMPERATURE	40 ℃
22. BEARING LUBRICATION	G R E A S E
23. STARTING METHOD	F U L L V O L T A G E

192.168.11.51 / 2021-01-06 08:38:38

불법복제 및 배포금지

CUSTOMER

오성산업

PO No.

MILL CERTIFICATE

Daichang Marine Tech Co., Ltd.

NO. DC-20-1536

	DESCRIPTION	SIZE	QUANTITY	MATERIAL	CHARGE NO.
1	Shank hook	15 ton	1	SCM440	C12394
2	=BLANK=				
3					
4					
5					
6					

CHARGE NO.	CHEMICAL COMPOSITION									MECHANICAL PROPERTY			
	C	Si	Mn	P	S	Ni	Cr	Mo	Cu	Yield Strength kg/㎟	Tensile strength kg/㎟	Elonga-tion %	Reduction of Area %
C12394	0.410	0.200	0.680	0.014	0.013	0.060	0.970	0.160	0.110	=BLANK=			
=BLANK=													

DCH 본 성적서의 복사본은 무효임

HEAT TREATMENT ■ QUENCHING & TEMPERING ☐ NORMALIZING ☐ ANNEALING ☐ OTHERS ( )

* LOAD AND HARDNESS TEST *

ITEM NO	MIN. BREAKING STRENGTH (TON)						HARDNESS ☐ HRC ☐ HB					
	SPEC.	ACTUAL					SPEC.	ACTUAL				
1	75.0	77.0	=BLANK=				=BLANK=					
2	=BLANK=											
3												
4												
5												
6												

REMARK Safe working load is
Shank hook 15 ton = 15.0ton

PASSED

DATE 2020. 12. 14.

Q.C MANAGER Park Kang Hoon

192.168.11.51 / 2021-01-06 08:38:38